HOW TO USE THIS MANUAL

Follow the Maintenance Schedule (Section 3) recommendations to ensure that the scooter is in peak operating condition and the emission levels are within the standards set by the U. S. Environmental Protection Agency and the California Air Resources Board. Performing the first scheduled maintenance is very important. It helps compensate for the initial

CONTENTS

GENERAL INFORMATION 1

LUBRICATION 2

MAINTENANCE 3

FUEL SYSTEM 4

1. GENERAL INFORMATION

GENERAL SAFETY	1-1	TORQUE VALUES	1-5
SERVICE RULES	1-1	TOOLS	1-7
MODEL IDENTIFICATION	1-2	CABLE & HARNESS ROUTING	1-9
SPECIFICATIONS	1-3	EMISSION CONTROL SYSTEM	1-13

GENERAL SAFETY

WARNING

Inhaled asbestos fibers have been found to cause respiratory disease and cancer. Never use an air hose or dry brush to clean brake or clutch assemblies. In the United States, use an OSHA-approved vacuum cleaner or alternate method approved by OSHA-designed to minimize the hazard caused by airborn asbestos fibers.

WARNING

If the engine must be running to do some work, make sure the area is well-ventilated. Never run the engine in a closed area. The exhaust contains poisonous carbon monoxide gas that can cause loss of consciousness and may lead to death.

WARNING

Gasoline is extremely flammable and is explosive under certain conditions. Do not smoke or allow flames or sparks in your working area.

WARNING

The battery electrolyte contains sulfuric acid. Protect your eyes, skin and clothing. In case of contact, flush thoroughly with water and call a doctor if electrolyte gets in your eyes.

WARNING

The battery generates hydrogen gas which can be highly explosive. Do not smoke or allow flames or sparks near the battery, especially while charging it.

CAUTION

Used engine oil may cause skin cancer if repeatedly left in contact with the skin for prolonged periods. Although this is unlikely unless you handle used oil on an daily basis, it is advisable to thoroughly wash your hands with soap and water as soon as possible after handling used oil.

SERVICE RULES

1. Use genuine Honda or Honda-recommended parts and lubricants or their equivalents. Parts that do not meet Honda's design specifications may damage the scooter.
2. Use the special tools designed for this product.
3. Use only metric tools when servicing this scooter. Metric bolts, nuts, and screws are not interchangeable with English fasteners. The use of incorrect tools and fasteners may damage the scooter.
4. Install new gaskets, O-rings, cotter pins, lock plates, etc. when reassembling.
5. When tightening bolts or nuts, begin with larger-diameter or inner bolts first, and tighten to the specified torque diagonally, unless a particular sequence is specified.
6. Clean parts in cleaning solvent upon disassembly. Lubricate any sliding surfaces before reassembly.
7. After reassembly, check all parts for proper installation and operation.
8. Route all electrical wires as shown on pages 1-8 thru. 1-12, Cable & Harness Routing, and away from sharp edges and areas when they might be pinched between moving parts.

MODEL IDENTIFICATION

'85 SHOWN; AFTER '85 Similar

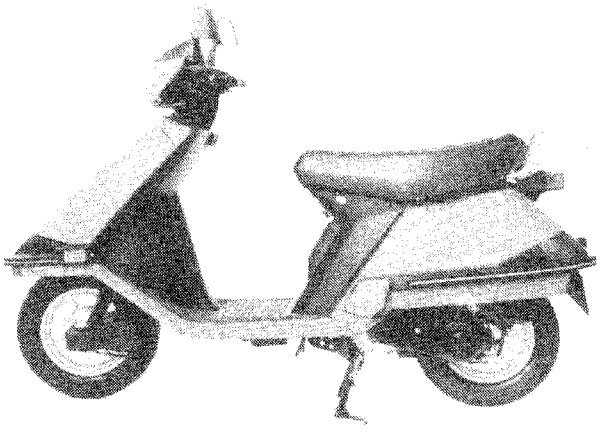

The frame serial number is stamped on the left side of the frame body.

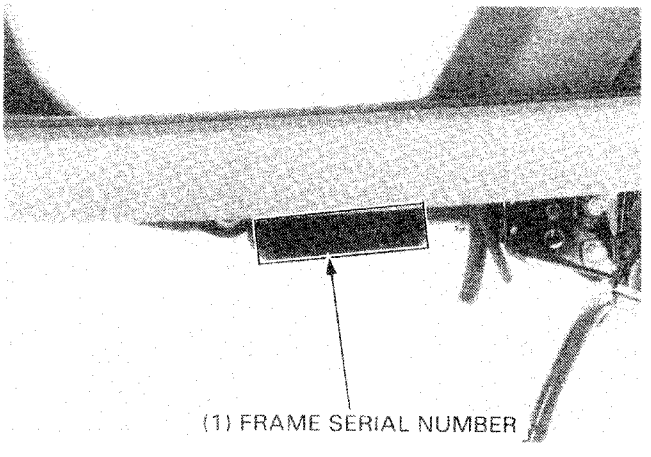

The carburetor identification number is stamped on the carburetor.

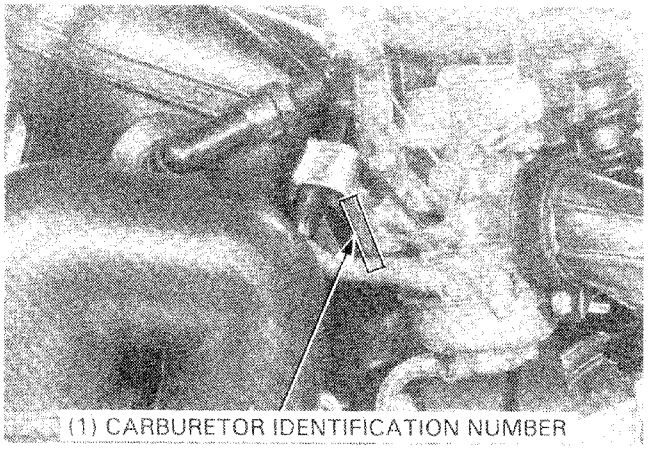

The engine serial number is stamped on bottom of the left crankcase.

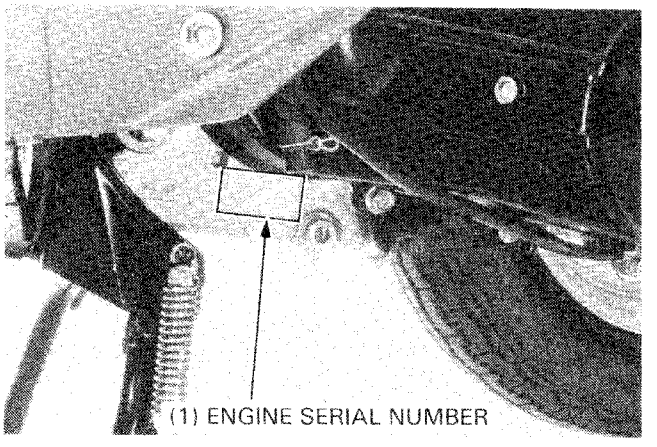

The VIN (Vehicle Identification Number) is attached to the frame tube forward of the front cover.

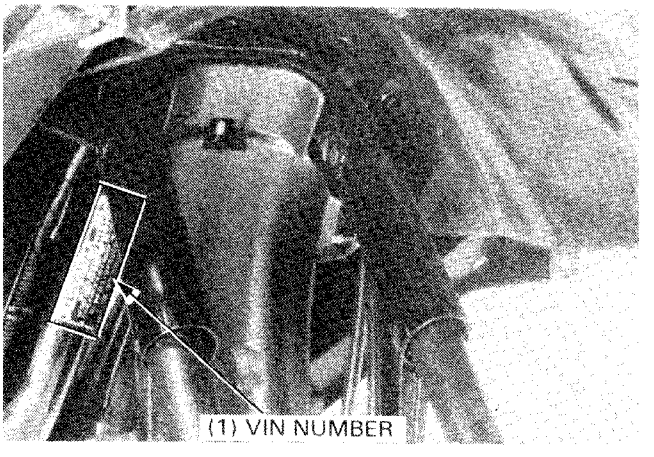

The color label is attached to the fuel tank below the seat.

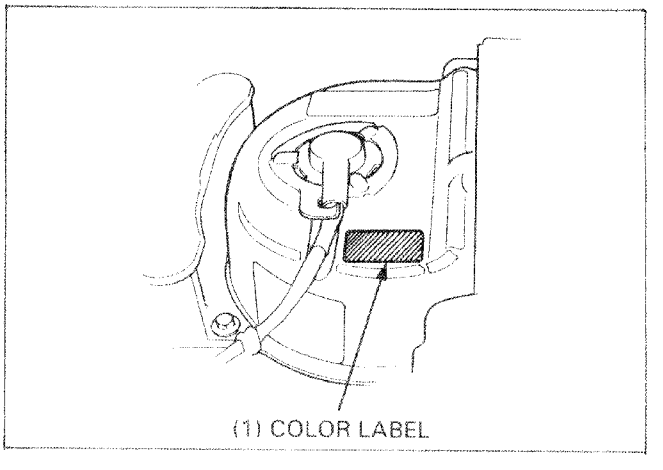

SPECIFICATIONS

ITEM			SPECIFICATION
DIMENSIONS	Overall length		1,750 mm (68.9 in)
	Overall width		670 mm (26.4 in)
	Overall height		'85—'88: 1,105 mm (43.5 in)
			AFTER '88: 1,095 mm (43.1 in)
	Wheelbase		1,170 mm (46.1 in)
	Ground clearance		'85—'88: 135 mm (5.3 in)
			AFTER '88: 130 mm (5.1 in)
	Dry weight		78 kg (172 lb)
FRAME	Type		Back bone
	Front suspension, travel		'85—'88: Bottom link, 80 mm (3.1 in)
			AFTER '88: Bottom link, 75 mm (3.0 in)
	Rear suspension, travel		'85—'88: Power unit swing arm, 64.5 mm (2.5 in)
			AFTER '88: Power unit swing arm, 79 mm (3.1 in)
	Vehicle capacity load		'85: 149 kg (329 lb)
			AFTER '85: 152 kg (335 lb)
	Front tire size		3.50—10—4PR
	Rear tire size		3.50—10—4PR
	Tire pressure		
	Up to vehicle capacity load	Front	150 kPa (1.50 kg/cm², 22 psi)
		Rear	225 kPa (2.25 kg/cm², 33 psi)
	Up to 90 kg (200 lbs) load	Front	150 kPa (1.50 kg/cm², 22 psi)
		Rear	175 kPa (1.75 kg/cm², 25 psi)
	Front brake		Internal expanding shoes
	Rear brake		Internal expanding shoes
	Fuel capacity		5.0 liter (1.3 US gal., 1.1 Imp gal.)
	Caster angle		26°
	Trail length		'85—'88: 59 mm (2.3 in)
			AFTER '88: 68 mm (2.7 in)
ENGINE	Type		Air cooled 4-stroke, OHC engine
	Cylinder arrangement		Single cylinder
	Bore and stroke		49.5 x 41.4 mm (1.95 x 1.63 in)
	Displacement		79.7 cm³ (4.86 cu-in)
	Compression ratio		9.3 : 1
	Engine oil capacity		750 cc (25 US oz, 0.66 Imp qt.) after disassembly
			600 cc (20 US oz, 0.53 Imp qt.) after draining
	Lubrication system		Forced pressure and wet sump
	Transmission oil		60 cc (2 US oz, 0.053 Imp qt.) after disassembly
			52 cc (1.8 US oz, 0.046 Imp qt.) after draining
	Air filtration		Paper filter
	Cylinder compression		1,400 kPa (14 kg/cm², 199 psi)
	Intake valve	Opens	0° (BTDC) at 1 mm lift
		Closes	20° (ABDC) at 1 mm lift
	Exhaust valve	Opens	30° (BBDC) at 1 mm lift
		Closes	2.5°(ATDC) at 1 mm lift
	Valve clearance (Cold)		IN/EX: 0.05 mm (0.002 in)
	Engine weight		17.5 kg (38.6 lb)
	Idle speed		1,700 ± 100 rpm

ITEM		SPECIFICATION	
CARBURETION	Carburetor type	Change valve type VC	
	Identification number	'85: VC61A After '85: VC61C	
	Air screw initial setting	'85: 1-7/8 turns out After '85: 1-1/2 turns out	
	Float level	10.7 mm (0.42 in)	
DRIVE TRAIN	Clutch type	Dry, automatic centrifugal clutch	
	Primary reduction	V-matic	
	Gear ratio	2.8 – 1.08	
	Final reduction	8.382 : 1	
ELECTRICAL	Ignition	Capacitor Discharge Ignition (CDI)	
	Starting system	Starting motor	
	Generator	'85 – '00: 12V 99W/5,000 rpm After '00: 12V 100W/5,000 rpm	
	Spark plug	NGK	DENSO
	For cold climate (below 5°C/41°F)	CR6HS	U20FSR-U
	Standard	CR7HS	U22FSR-U
	For extended high speed riding	CR8HS	U24FSR-U
	Spark plug gap	0.6 – 0.7 mm (0.024 – 0.028 in)	
	ignition timing "F" mark	'85 – '88: 18° BTDC/1,700 rpm '88 – '00: 18° BTDC/1,800 rpm After '00: 18° BTDC/2,000 rpm	
	Battery capacity	'85: 12V-5AH After '85: 12V-4AH	
	Fuse	'85: 7A After '85: 10A	
LIGHTS	Headlight Low/High	'85 – '00: 12V 25/25W After '00: 12V 35/35W	
	Brake/Taillight	12V 32/3CP (27/8W)	
	Turn signal light	12V 32CP (23W) SAE No. 1156	
	Speedometer light	12V 1.7W x 2	
	Turn signal indicator	12V 3.4W	
	High beam indicator	12V 3.4W	
	License light	12V 2CP (3.8W)	

NEW

Revised: September, 2000, 1985-2001 CH80 Elite
© 2000 American Honda Motor Co., Inc. - All Rights Reserved
MSV 9012 (0009)

TORQUE VALUES

ENGINE

ITEM	Q'TY	THREAD DIA. (mm)	TORQUE N·m (kg-m, ft-lb)	REMARKS
Camshaft holder nut	4	6	10–14 (1.0–1.4, 7–10)	
Cylinder head cover	3	6	10–14 (1.0–1.4, 7–10)	
Cam chain tensioner sealing bolt	1	14	38–45 (3.8–4.5, 27–33)	
Cam chain tensioner	1	8	13–17 (1.3–1.7, 9–12)	
Clutch lock nut	1	28	35–40 (3.5–4.0, 25–29)	
Flywheel	1	10	35–40 (3.5–4.0, 25–29)	
Crankcase	—	6	9–12 (0.9–1.2, 7–9)	
Movable face seal	3	4	2.5–4 (0.25–0.4, 1.8–2.9)	
Drive face	1	10	35–40 (3.5–4.0, 25–29)	
Clutch outer	1	10	35–40 (3.5–4.0, 25–29)	
Movable driver face	1	10	50–60 (5.0–6.0, 36–43)	

FRAME

ITEM	Q'TY	THREAD DIA. (mm)	TORQUE N·m (kg-m, ft-lb)	REMARKS
Engine hanger upper	1	10	35–45 (3.5–4.5, 25–32)	
Engine hanger lower	1	10	35–45 (3.5–4.5, 25–32)	
Engine hanger stopper bolt	1	8	15–25 (1.5–2.5, 11–18)	
Steering stem lock nut	1	—	5–13 (0.5–1.3, 4–9)	
Steering stem nut	1	—	80–120 (8.0–12.0, 58–87)	
Front fork pivot arm flange nut	2	8	27–33 (2.7–3.3, 20–24)	
Front shock absorber upper '85, '86:	2	8	30–36 (3.0–3.6, 22–26)	
After '86:	2	8	27–33 (2.7–3.3, 20–24)	
Front axle flange nut	1	12	50–70 (5.0–7.0, 36–51)	
Rear axle flange nut '85, '86:	1	14	80–100 (8.0–10.0, 58–72)	
After '86:	1	14	100–120 (10.0–12.0, 72–87)	
Rear shock absorber upper	1	10	30–45 (3.0–4.5, 22–33)	
Rear shock absorber lower	1	8	20–30 (2.0–3.0, 14–22)	
Rear shock absorber damper lock nut	1	8	1.5–2.5 (15–25, 11–18)	
EXP joint nut	2	6	5–12 (0.5–1.2, 4–9)	
Muffler stay flange bolt '85, '86:	3	8	20–30 (2.0–3.0, 14–22)	
After '86:	3	8	30–36 (3.0–3.6, 22–26)	
Floor reinforcement flange bolt	5	8	30–45 (3.0–4.5, 22–33)	
Ignition coil bolt	1	5	5–9 (0.5–0.9, 4–7)	
Seat hinge flange nut	4	6	5–9 (0.5–0.9, 4–7)	
Lighting switch	2	5	2–4 (0.2–0.4, 1–3)	
Turn signal switch	2	5	2–4 (0.2–0.4, 1–3)	
Handle lever pivot bolt	2	5	2–4 (0.2–0.4, 1–3)	
Handle lever nut	2	5	2–4 (0.2–0.4, 1–3)	
Front fender bolt	5	—	2–4 (0.2–0.4, 1–3)	
Trunk hinge flange bolt	2	5	2–4 (0.2–0.4, 1–3)	
Trunk hinge patch screw	3	—	2–4 (0.2–0.4, 1–3)	
Horn	1	8	20–24 (2.0–2.4, 14–17)	
Trunk lid self-tapping screw	9	4	0.5–1.5 (0.05–0.15, 0.4–1.1)	

ITEM	Q'TY	THREAD DIA. (mm)	TORQUE N·m (kg-m, ft-lb)	REMARKS
Handlebar front cover tapping	3	4	0.5–1.5 (0.05–0.15, 0.4–1.1)	
Handlebar front cover screw	2	5	2–4 (0.2–0.4, 1–3)	
Handlebar lower cover hinge patch screw	4	–	2–4 (0.2–0.4, 1–3)	
Leg shield flange bolt	2	5	2–4 (0.2–0.4, 1–3)	
Right/left handle cover tapping	3	4	0.5–1.5 (0.05–0.15, 0.4–1.1)	
Speedometer cable lower	1	5	1.5–3 (0.15–0.3, 1.1–2.2)	
Carrier	1	8	20–30 (2.0–3.0, 14–22)	
License plate base	2	–	0.5–1.5 (0.05–0.15, 0.4–1.1)	
Headlight tapping	3	4	0.5–1.5 (0.05–0.15, 0.4–1.1)	
Carburetor insulator band	1	5	2–4 (0.2–0.4, 1–3)	
Tank insulator tapping	2	5	0.5–1.5 (0.05–0.15, 0.4–1.1)	
Front turn signal tapping	1	4	0.5–1.5 (0.05–0.15, 0.4–1.1)	
Front turn signal cover tapping	2	4	0.5–1.5 (0.05–0.15, 0.4–1.1)	
Taillight cover	1	–	2–4 (0.2–0.4, 1–3)	
Main stand bracket flange bolt	1	8	20–30 (2.0–3.0, 14–22)	

Torque specifications listed above are for the most important tightening points. If a specification is not listed, follow the standard torque values below.

STANDARD TORQUE VALUES

TYPE	TORQUE N·m (kg-m, ft-lb)	TYPE	TORQUE N·m (kg-m, ft-lb)
5 mm bolt, nut	4.5–6.0 (0.45–0.6, 3.3–4.3)	5 mm screw	3.5–5 (0.35–0.5, 2.5–3.6)
6 mm bolt, nut	8–12 (0.8–1.2, 6–9)	6 mm screw	7–11 (0.7–1.1, 5–8)
8 mm bolt, nut	18–25 (1.8–2.5, 13–18)	6 mm flange bolt, nut	10–14 (1.0–1.4, 7–10)
10 mm bolt, nut	30–40 (3.0–4.0, 22–29)	8 mm flange bolt, nut	24–30 (2.4–3.0, 17–22)
12 mm bolt, nut	50–60 (5.0–6.0, 36–43)	10 mm flange bolt, nut	30–40 (3.0–4.0, 22–29)
6 mm SH bolt	8–12 (0.8–1.2, 6–9)		

TOOLS

SPECIAL

DESCRIPTION	TOOL NUMBER	ALTERNATE TOOL	TOOL NUMBER	REF. SECT.
Vacuum pressure pump	A937X—041—XX XXX	Vacuum pump (U.S.A. only)	ST-AH-260-MC-7	4
Valve guide reamer	07984—MA60000	Valve guide reamer	07984—MA6000A (U.S.A. only)	6
Valve guide driver, 5 mm	07942—MA60000			6
Valve spring compressor attachment	07959—KM30101			6
Lock nut wrench, 39 mm	07916—1870002			8
Clutch spring compressor	07960—KJ90000	Clutch spring compressor	07960—KM1000A	8
Bearing driver	07945—GC80000			8
Bearing driver attachment, 28 x 30 mm	07946—1870100			8, 9
Flywheel puller	07935—8050003			8
Assembly collar	07965—1480100			9
Assembly bolt	07965—1480200			9
Lock nut wrench	07916—1870100	Lock nut wrench, 30 x 22 mm or equivalent commercially available in U.S.A.	07716—0020400	13
Lock nut wrench	07916—GK00000	Adjustable pin spanner	07702—0020001	13
Ball race remover	07946—GA70000			13
Ball race remover	07953—KJ90000	Not available in U.S.A.		13
Rear cushion attachment B	07967—GA70200	Compressor attachment	07967—GA70001	14
Spring attachment	07967—1180100			14

COMMON

DESCRIPTION	TOOL NUMBER	ALTERNATE TOOL	TOOL NUMBER	REF. SECT.
Wrench, 8 x 9 mm	07708—0030100	Equivalent commercially available in U.S.A.		3
Adjusting wrench	07708—0030400	Valve adjustment wrench	07908—KE90200	3
Float level gauge	07401—0010000			4
Valve spring compressor	07757—0010000			6
Universal holder	07725—0030000	Band strap wrench (Commercially available in U.S.A.)		8, 10
Attachment, 32 x 35 mm	07746—0010100			9
Attachment, 37 x 40 mm	07746—0010200			9
Attachment, 42 x 47 mm	07746—0010300			9, 13
Driver	07749—0010000			9, 13
Pilot, 12 mm	07746—0040200			9, 13
Pilot, 20 mm	07746—0040500			9
Pilot, 15 mm	07746—0040300			8
Pilot, 17 mm	07746—0040400			9
Flywheel puller	07733—0010000			10
Remover shaft	07746—0050300	Equivalent tool commercially available in U.S.A.		13
Remover head, 12 mm	07746—0050100			13
Extension bar	07716—0020500			13
Shock absorber compressor	07959—3290001			14

CABLE & HARNESS ROUTING

Note the following when routing cables and wire harnesses. A loose wire, harness or cable can be a safety hazard. After clamping, check each wire to be sure it is secure.

- Do not squeeze wires against the weld or end of its clamp.
- Secure wires and wire harnesses to the frame with their respective wire bands at the designated locations. Tighten the bands so that only the insulated surfaces contact the wires or wire harnesses.
- Route harnesses so they are not pulled taut or have excessive slack.
- Protect wires and harnesses with electrical tape or tube if they contact a sharp edge or corner. Clean the attaching surface thoroughly before applying tape.
- Do not use wires or harnesses with broken insulators. Repair by wrapping them with protective tape or replace them.
- Route wire harnesses to avoid sharp edges or corners.
- Avoid the projected ends of bolts and screws.
- Keep wire harnesses away from the exhaust pipes and other hot parts.
- Be sure grommets are seated in their grooves properly.
- After clamping, check each harness to be certain that it is not interfering with any moving or sliding parts.
- After routing, check that the wire harnesses are not twisted or kinked.
- Wire harnesses routed along the handlebars should not be pulled taut, have excessive slack, be pinched, or interfere with adjacent or surrounding parts in all steering positions.
- Do not bend or twist control cables. Damaged control cables will not operate smoothly and may stick or bind.

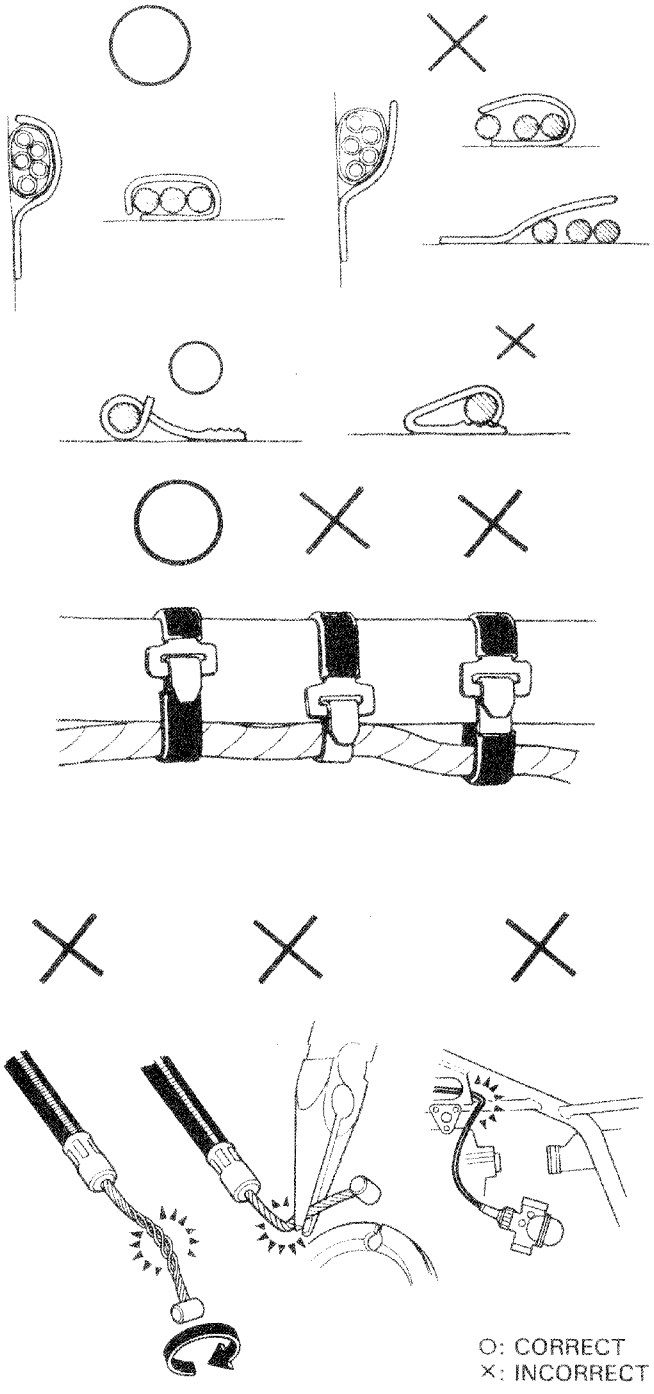

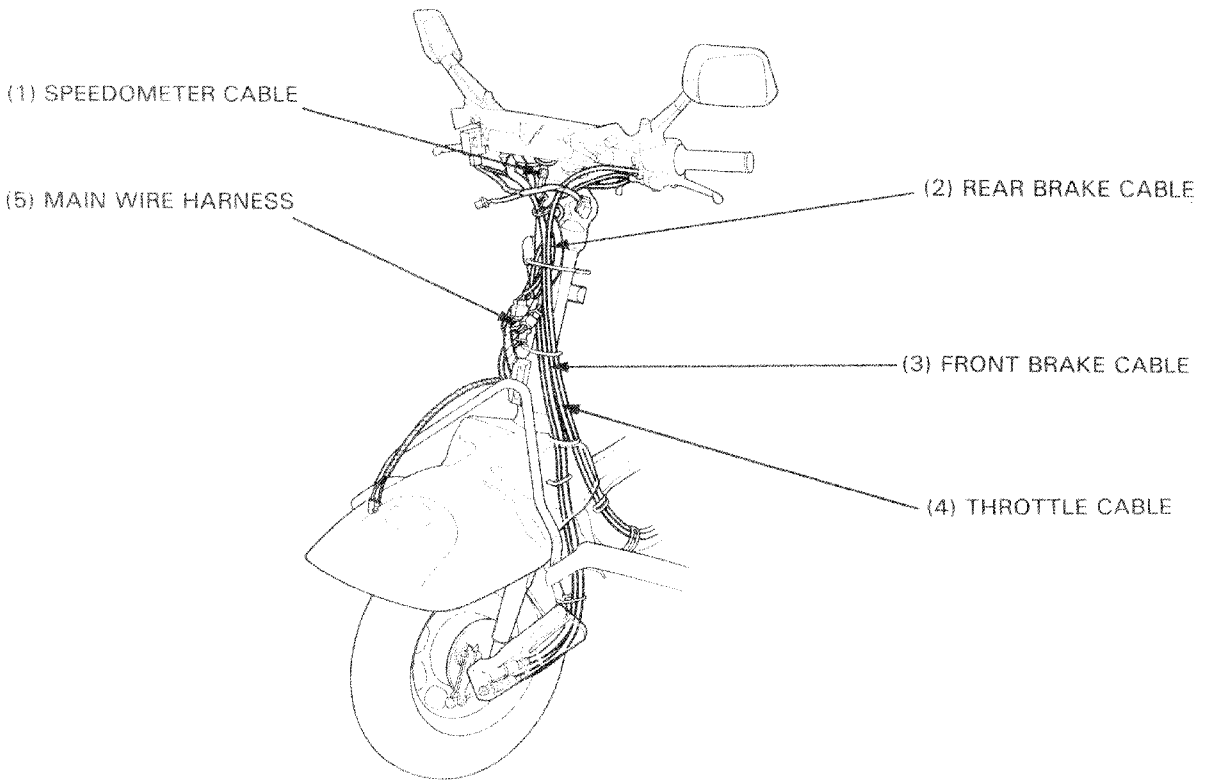
(1) SPEEDOMETER CABLE
(5) MAIN WIRE HARNESS
(2) REAR BRAKE CABLE
(3) FRONT BRAKE CABLE
(4) THROTTLE CABLE

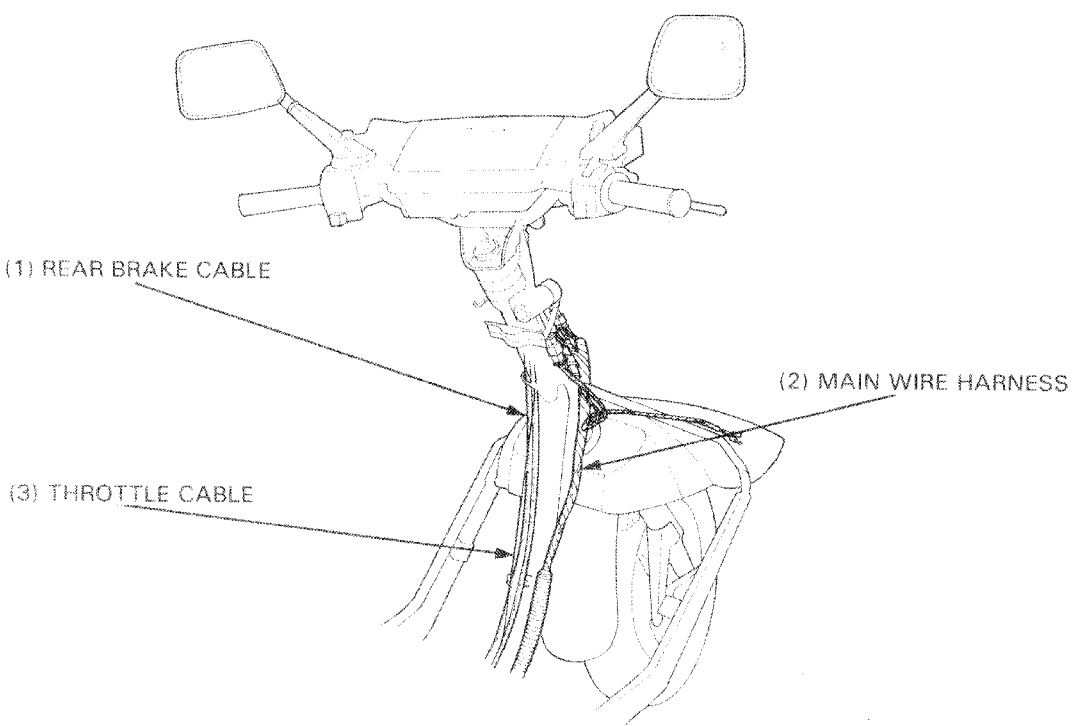
(1) REAR BRAKE CABLE
(2) MAIN WIRE HARNESS
(3) THROTTLE CABLE

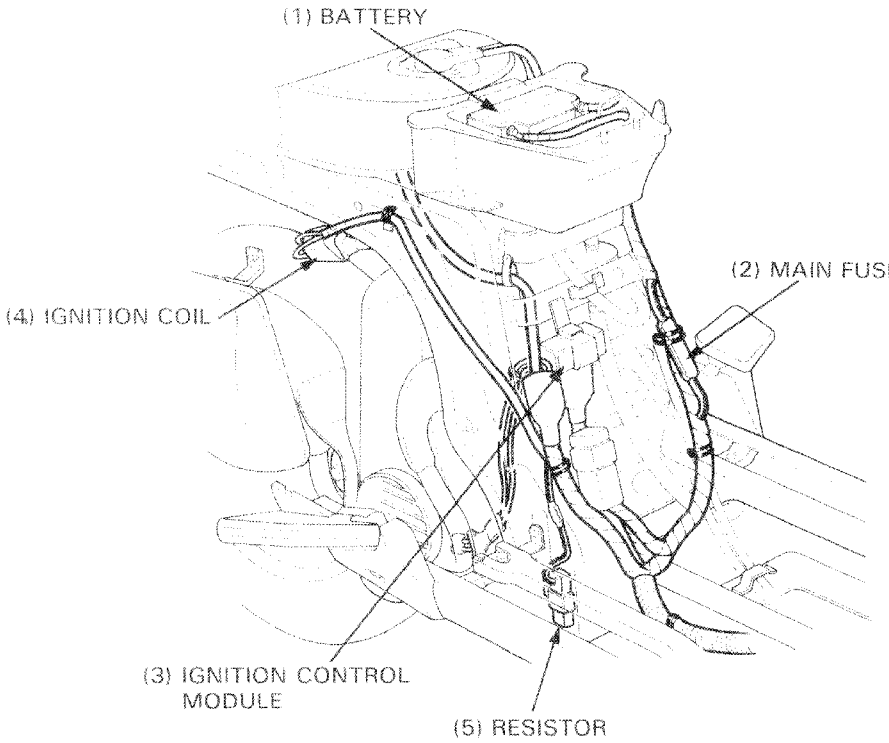

CALIFORNIA MODEL ONLY:

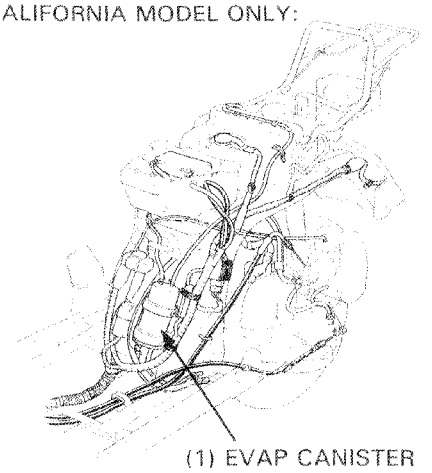

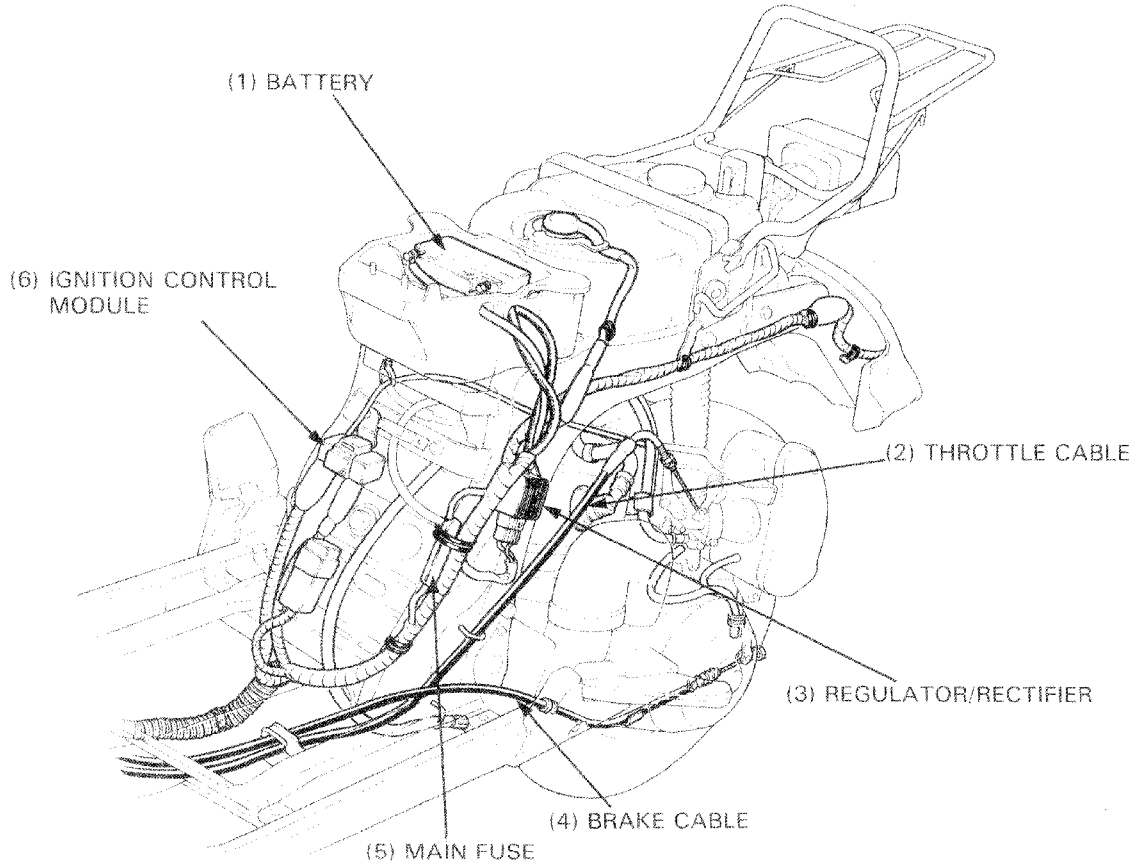

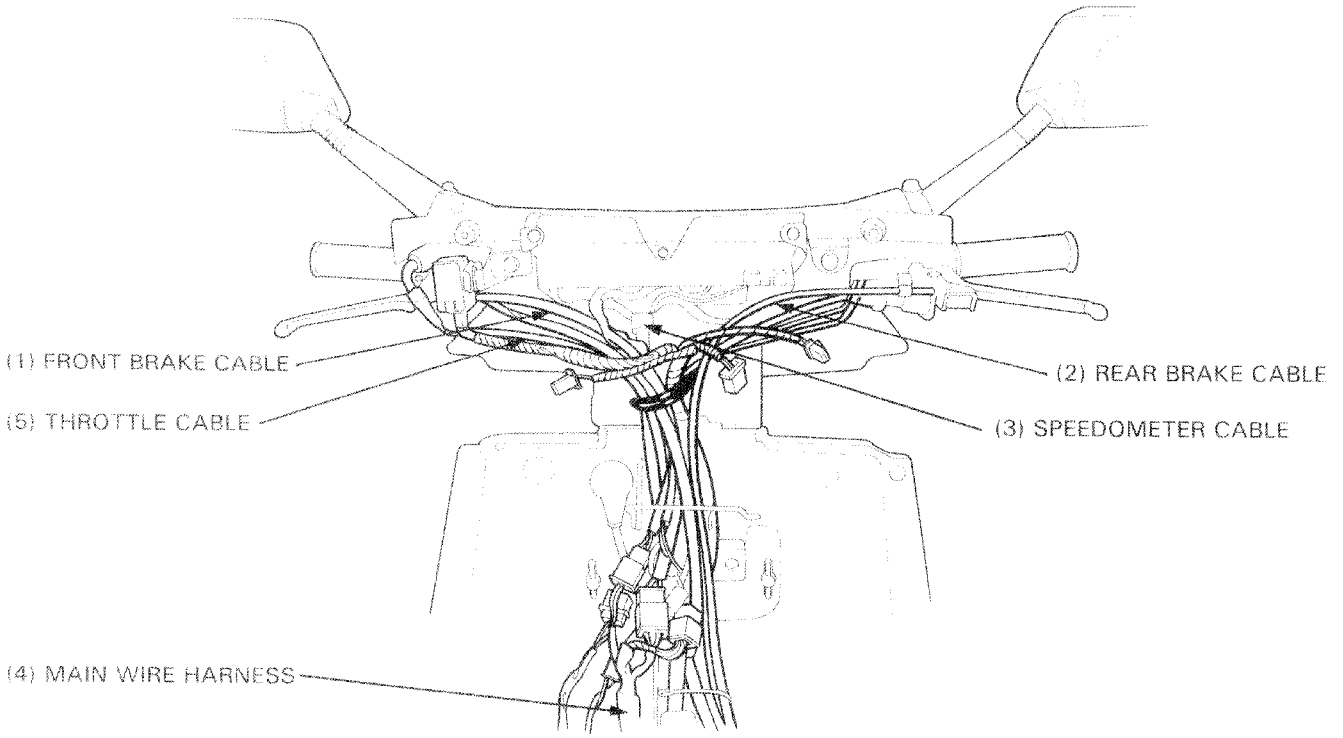
(1) FRONT BRAKE CABLE
(5) THROTTLE CABLE
(4) MAIN WIRE HARNESS
(2) REAR BRAKE CABLE
(3) SPEEDOMETER CABLE

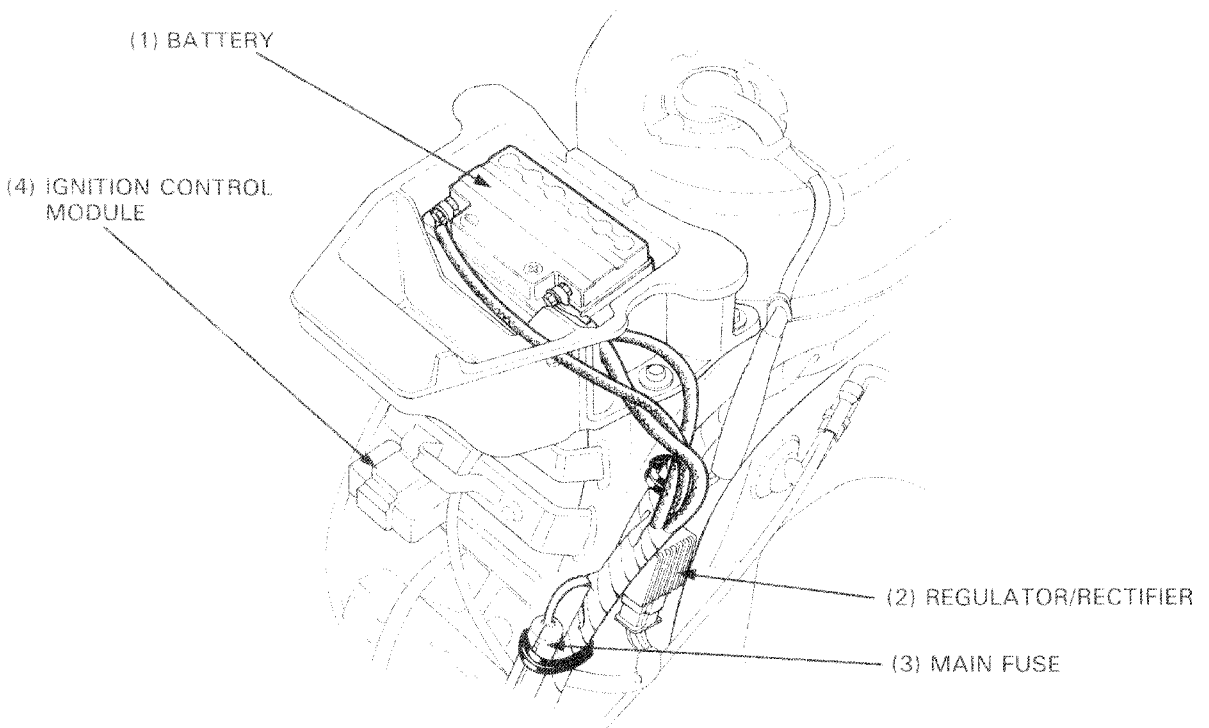
(1) BATTERY
(4) IGNITION CONTROL MODULE
(2) REGULATOR/RECTIFIER
(3) MAIN FUSE

After '85:

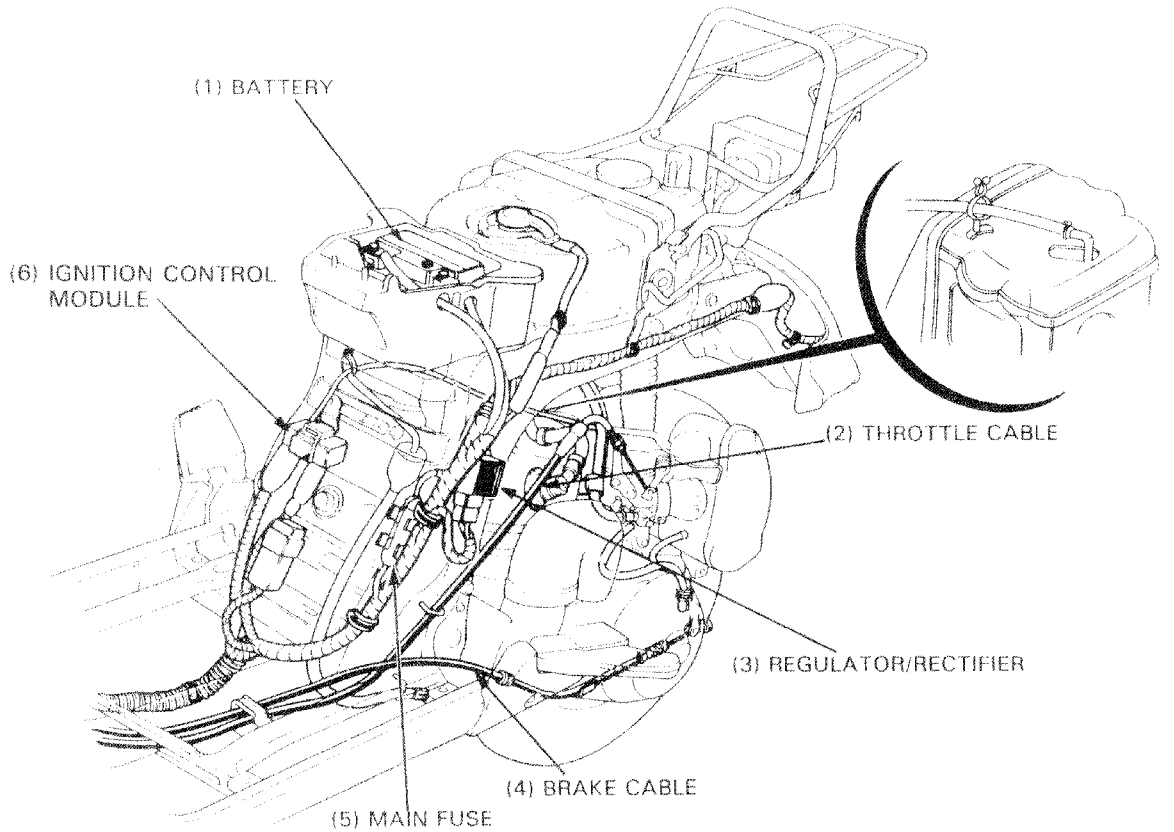
(1) BATTERY
(6) IGNITION CONTROL MODULE
(2) THROTTLE CABLE
(3) REGULATOR/RECTIFIER
(4) BRAKE CABLE
(5) MAIN FUSE

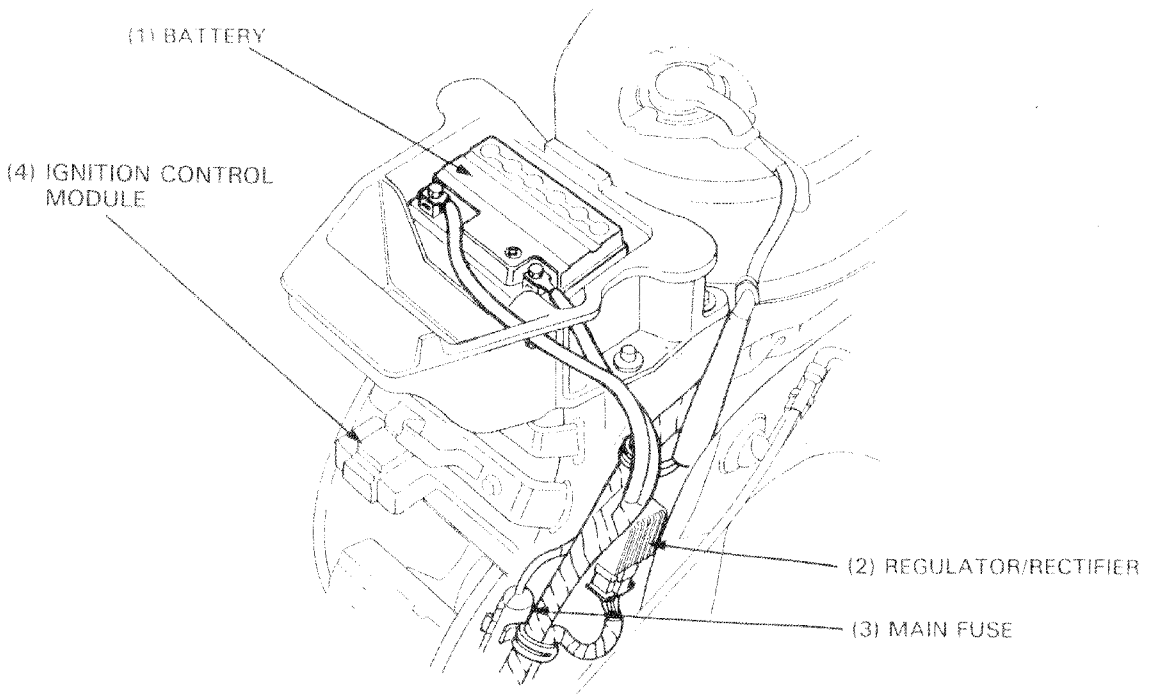
(1) BATTERY
(4) IGNITION CONTROL MODULE
(2) REGULATOR/RECTIFIER
(3) MAIN FUSE

EMISSION CONTROL SYSTEM

The U.S. Environmental Protection Agency and California Air Resources Board (CARB) require manufacturers to certify that their scooters comply with applicable exhaust emission standards during their useful life, when operated and maintained according to the instructions provided, and that scooters built after January 1, 1983 comply with applicable noise emission standards for one year of 6,000 km (3,730 miles) after the time of sale to the ultimate purchaser, when operated and maintained according to the instructions provided. Compliance with the terms of the Distributor's Warranties for Honda Scooter Emission Control Systems is necessary in order to keep the emission warranty in effect.

SOURCE OF EMISSIONS

The combustion process produces carbon monoxide and hydrocarbons. Control of hydrocarbons is very important because, under certain conditions, they react to form photochemical smog when subjected to sunlight. Carbon monoxide does not react in the same way, but it is toxic.
Honda Motor Co., Ltd. utilizes lean carburetor settings as well as other systems, to reduce carbon monoxide and hydrocarbons.

EXHAUST EMISSION CONTROL SYSTEM

The exhaust emission control system is composed of lean carburetor settings, and no adjustments should be made except idle speed adjustment with the throttle stop screw.

CRANKCASE EMISSION CONTROL SYSTEM

The engine is equipped with a crankcase emission control system which routes crankcase emissions through the air cleaner and into the combustion chamber. Condensed crankcase vapors are accumulated in a transparent tube which must be emptied periodically. See the Maintenance Schedule in Section 3.

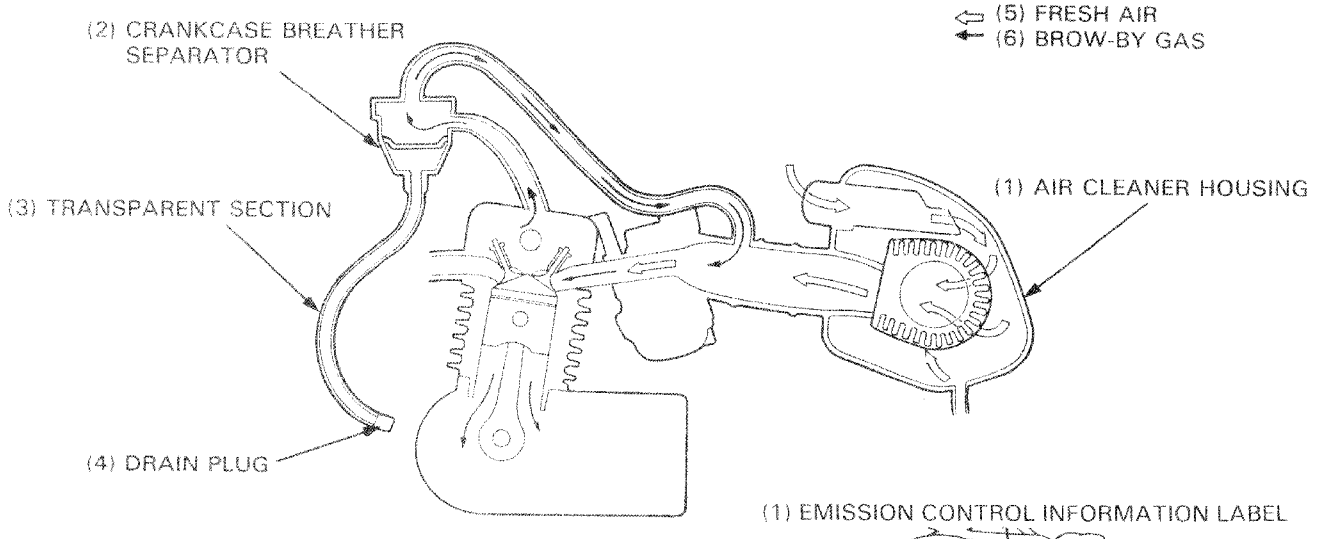

EMISSION CONTROL INFORMATION LABEL

An emission control information label is attached to the fuel tank below the seat as shown.
It gives basic tune-up specification.

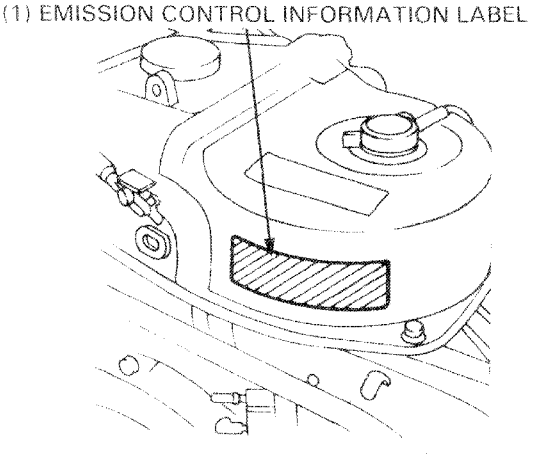

EVAPORATIVE EMISSION CONTROL SYSTEM (California model)

This model complies with California Air Resources Board requirements for evaporative emission regulations.
Fuel vapor from the fuel tank is routed into an evaporative emission canister where it is absorbed and stored while the engine is stopped.
When the scooter is running fuel vapor in the evaporative emission canister is drawn into the engine through the carburetor.

VACUUM HOSE ROUTING DIAGRAM LABEL (California model)

The Vacuum Hose Routing Diagram Label is attached to the left side of the fuel tank.

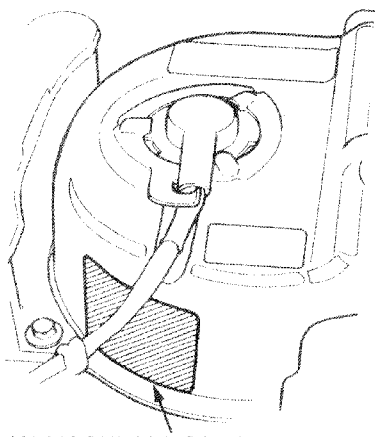

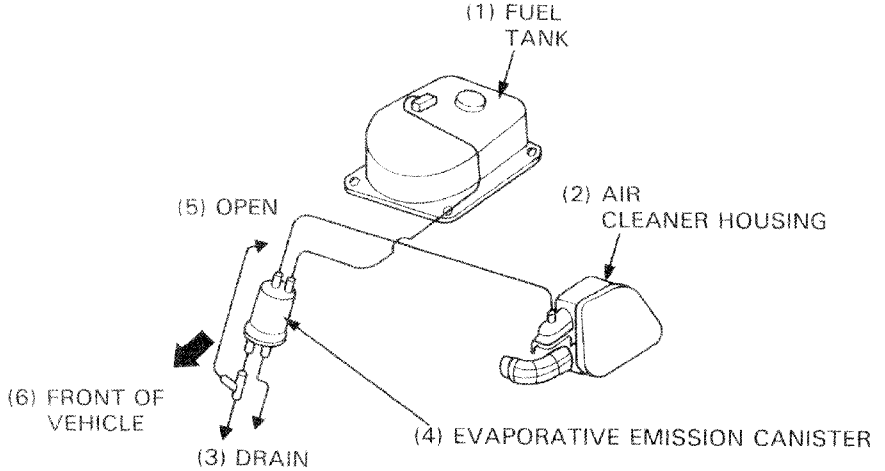

NOISE EMISSION CONTROL SYSTEM

TAMPERING WITH THE NOISE CONTROL SYSTEM IS PROHIBITED: Federal law prohibits the following acts or the causing thereof: (1) The removal or rendering inoperative by any person, other than for purposes of maintenance, repair, or replacement, of any device or element of design incorporated into any new vehicle for the purpose of noise control prior to its sale or delivery to the ultimate purchaser or while it is in use; or (2) the use of the vehicle after such device or element of design has been removed or rendered inoperative by any person.

AMONG THOSE ACTS PRESUMED TO CONSTITUTE TAMPERING ARE THE ACTS LISTED BELOW:
1. Removal of, or puncturing the muffler, baffles, header pipes or any other component which conducts exhaust gases.
2. Removal of, or puncturing of any part of the intake system.
3. Lack of proper maintenance.
4. Replacing any moving parts of the vehicle, or parts of the exhaust or intake system, with parts other than those specified by the manufacturer.

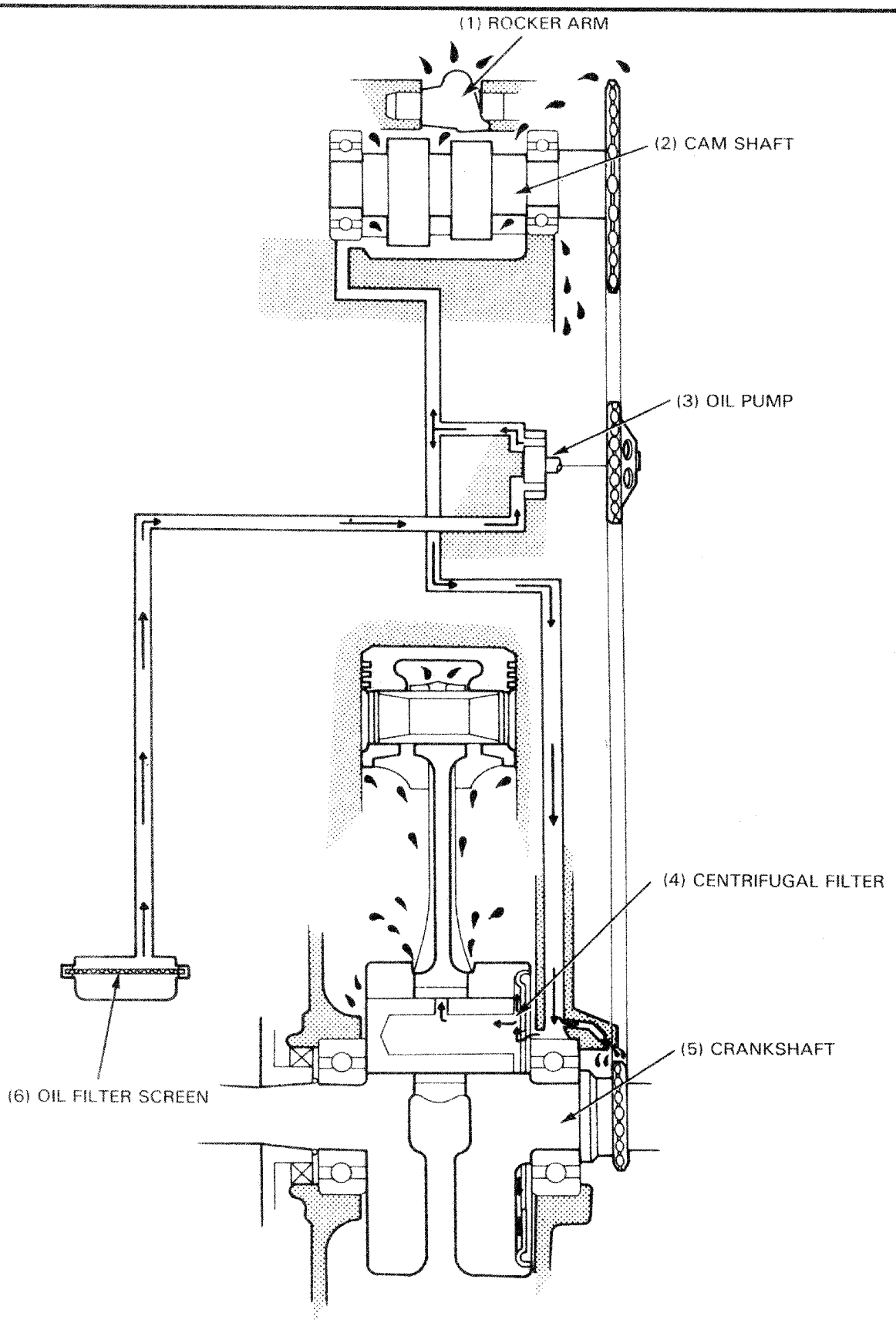
(1) ROCKER ARM
(2) CAM SHAFT
(3) OIL PUMP
(4) CENTRIFUGAL FILTER
(5) CRANKSHAFT
(6) OIL FILTER SCREEN

SERVICE INFORMATION	2-1	OIL PUMP INSPECTION	2-5
TROUBLESHOOTING	2-1	OIL PUMP ASSEMBLY	2-6
ENGINE OIL	2-2	OIL PUMP INSTALLATION	2-6
ENGINE OIL FILTER SCREEN CLEANING	2-3	TRANSMISSION OIL	2-7
OIL PUMP REMOVAL	2-3	LUBRICATION POINTS	2-8
OIL PUMP DISASSEMBLY	2-4		

SERVICE INFORMATION

GENERAL

- This section covers maintenance of the engine oil, transmission oil, oil pump and chassis lubrication points. This service can be done with the engine installed in the frame.

CAUTION

- *Used engine oil may cause skin cancer if repeatedly left in contact with the skin for prolonged periods. Although this is unlikely unless you handle used oil an a daily basis, it is still advisable to thoroughly wash your hands with soap and water as soon as possible after handling used oil.*

SPECIFICATIONS

Engine oil capacity: 750 cc (25 US oz, 0.66 Imp qt.) at disassembly
600 cc (20 US oz, 0.53 Imp qt.) at draining

Recommended oil: Use Honda GN4 or HP4 4-Stroke Oil or equivalent.
API Service Classifications: SF or SG
VISCOSITY: SAE 10W-40
Other viscosities shown in the chart may be used when the average temperature in your riding area is within the indicated range.

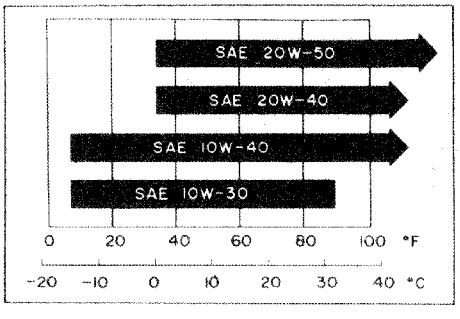

Transmission oil capacity: 60 cc (2 US oz, 0.053 Imp qt.) After disassembly
52 cc (1.8 US oz, 0.046 Imp qt.) After draining

Recommended oil: Honda GN4 or HP4 4-Stroke Oil, SAE 10W-30 or equivalent

ITEM		STANDARD	SERVICE LIMIT
Oil pump	Rotor tip clearance	0.15 mm (0.006 in)	0.20 mm (0.008 in)
	Body clearance	0.15—0.20 mm (0.006—0.008 in)	0.25 mm (0.010 in)
	Rotor end clearance	0.04—0.09 mm (0.002—0.004 in)	0.12 mm (0.005 in)

TORQUE VALUES

Oil drain plug	20—30 N•m (2.0—3.0 kg-m, 14—22 ft-lb)
Crankcase bolt	9—12 N•m (0.9—1.2 kg-m, 7—9 ft-lb)
Transmission oil drain bolt	10—14 N•m (1.0—1.4 kg-m, 7—10 ft-lb)

TROUBLESHOOTING

Oil level too low
- External oil leaks
- Worn valve guide or seal
- Worn piston rings

Oil contamination
- Oil not changed often enough
- Faulty head gasket
- Worn piston rings
- Engine oil additive used

Poor lubrication pressure
- Oil level too low
- Clogged oil filter, oil passage, and or oil pipe
- Faulty oil pump
- Oil not changed often enough

ENGINE OIL

OIL LEVEL

Stop the engine and support the scooter upright on level ground.
Check the oil level with the filler cap/dipstick.
Do not screw in the dipstick when making this check.
If the level is near the lower level mark, fill to the upper level mark with the recommended engine oil.

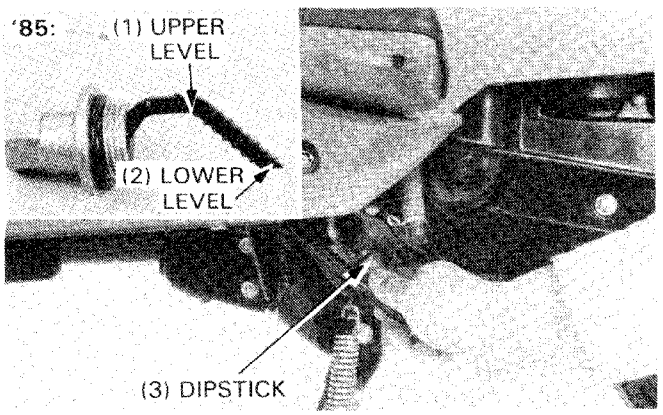

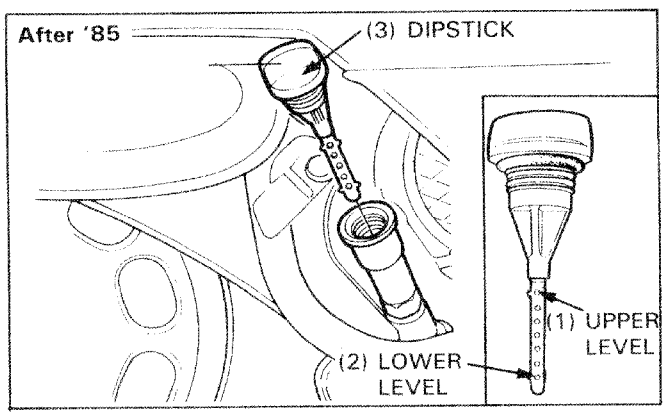

OIL CHANGE

NOTE

- Change engine oil with the engine warm and the scooter on its center stand to assure complete and rapid draining.

Remove the oil filler cap/dipstick and drain plug. After the oil has been drained, check that the drain plug sealing washer is in good condition and install the plug.

TORQUE: 20—30 N·m (2.0—3.0 kg-m, 14—22 ft-lb)

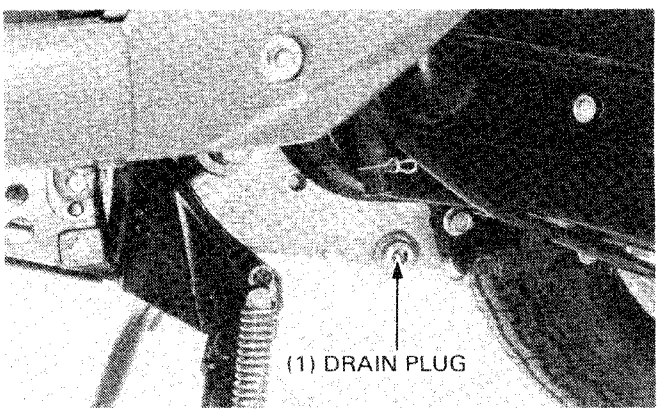

NOTE

- Perform the oil filter screen maintenance, if required, before filling the crankcase.

Fill the crankcase with 0.7 liter (0.74 U.S. qt., 0.62 Imp qt.) of recommended oil.

Install the oil filler cap/dipstick.
Start the engine and let it idle for 2 or 3 minutes.

Stop the engine and wait for a few minutes; then check that the oil level is at the upper level mark with the scooter upright.
Check that there are no oil leaks.

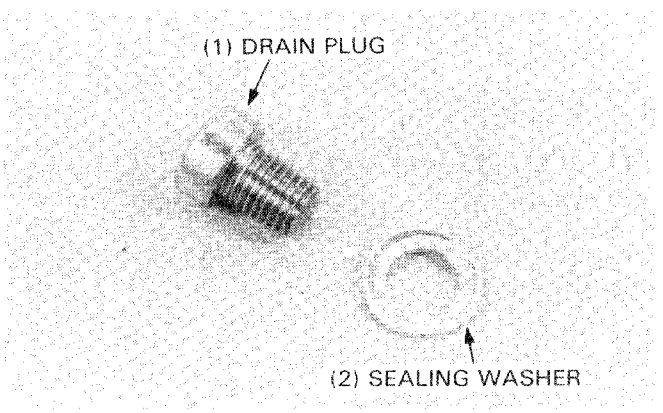

'85:
If required, remove the center cover and add the specified oil up to the upper level mark using the oil filler pipe stored in the tool set in the front trunk.
Replace the filler cap/dipstick and center cover. Check for oil leaks.

NOTE

- Route the oil filler pipe under the rear brake cable.
- Some oil may be left in the oil filler pipe. Before removing the pipe from the oil filler opening, turn the pipe downward and drain the residue into a container.

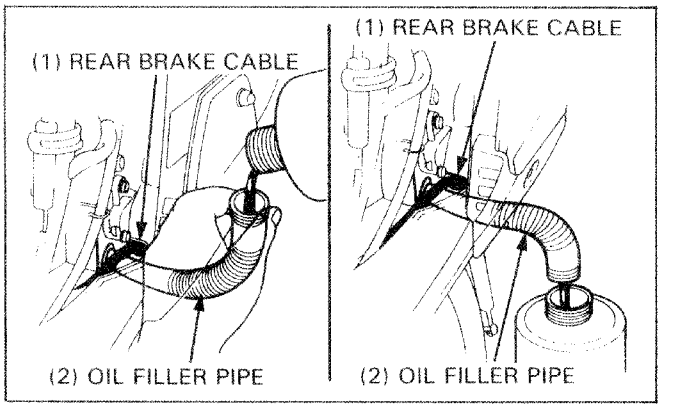

ENGINE OIL FILTER SCREEN CLEANING

NOTE

- Clean the oil filter screen whenever the crankcase cover has been removed.

Remove the engine.
Remove the crankcase cover.
Remove the oil filter screen and clean it.
Install the oil filter screen.

NOTE

- Install the oil filter screen with the thick end facing the outside.

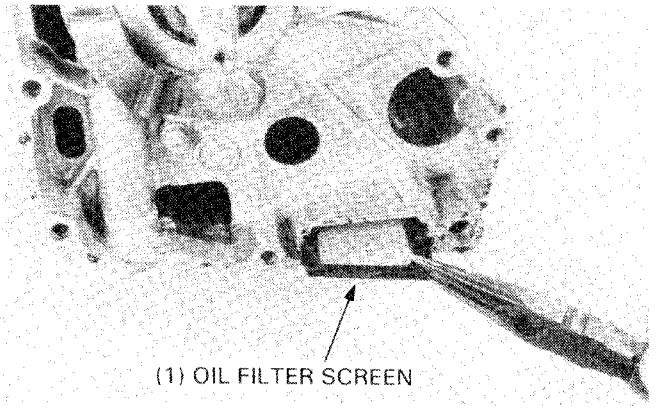

Install a new crankcase cover gasket.
Install the removed parts in the reverse order of disassembly.
Fill the crankcase with the recommended oil (page 2-1).

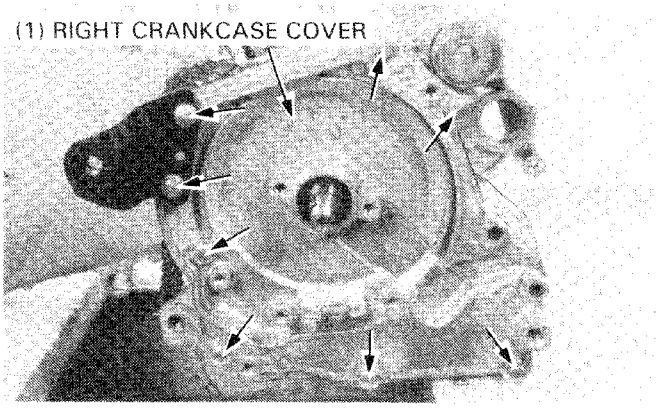

OIL PUMP REMOVAL

Remove the following:
— Engine (Section 5).
— Cylinder head (Section 6).
— Cylinder (Section 7).
Remove the alternator and right crankcase cover.

Remove the gasket and dowel pins.
Slide the cam chain to left, and pull out the oil pump sprocket with the pump shaft.

NOTE

- The pump sprocket has left hand threads.

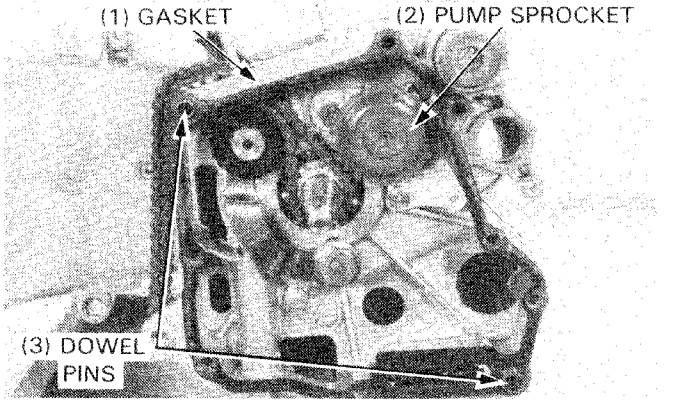

Remove the screws and oil pump.
Remove the O-rings.

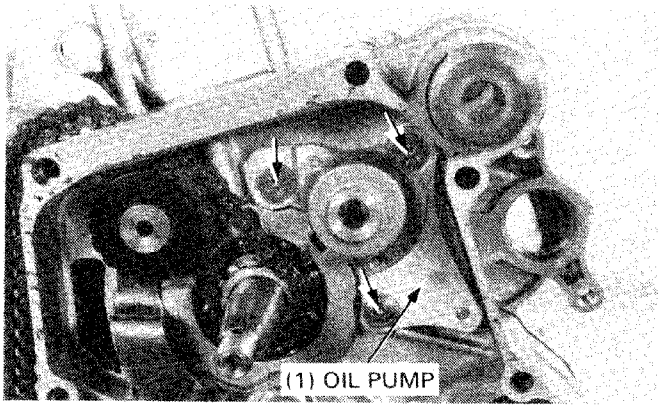

OIL PUMP DISASSEMBLY

Remove the three screws and oil pump cover.

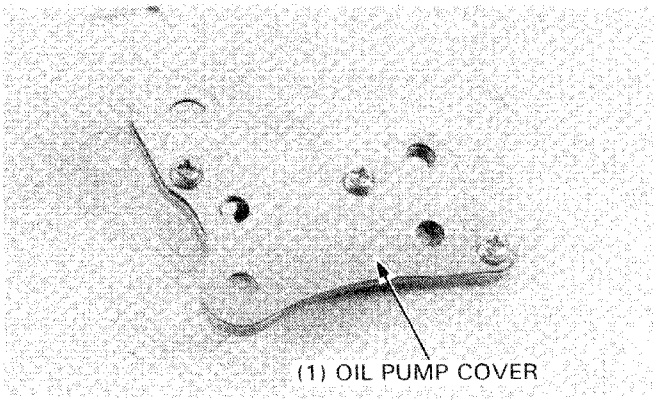

'85, '86:
Remove the inner rotor and outer rotor from the oil pump body.

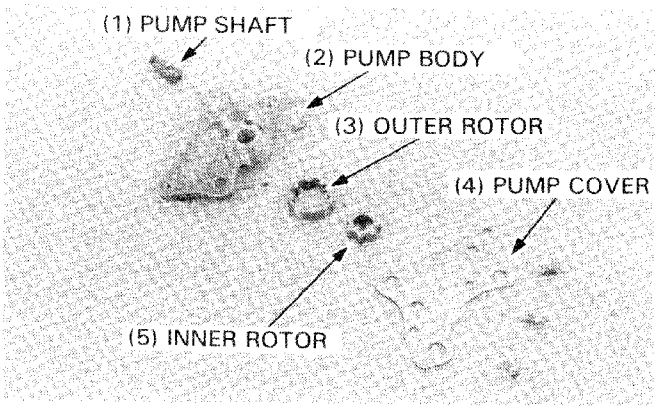

After '86:
Remove the inner rotor, outer rotor and gasket from the oil pump body.

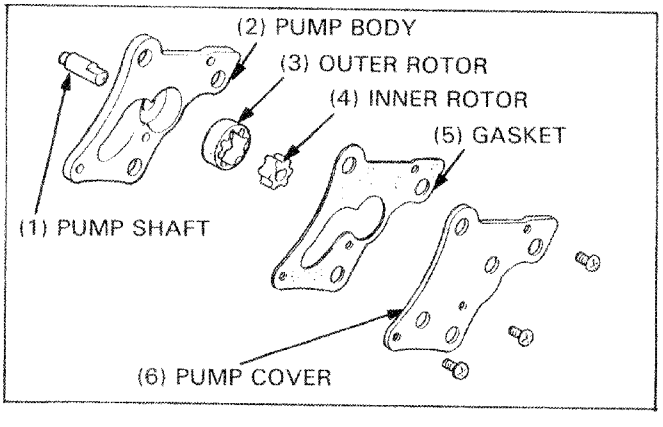

OIL PUMP INSPECTION

Measure the pump body-to-outer rotor clearance.

SERVICE LIMIT: 0.25 mm (0.010 in)

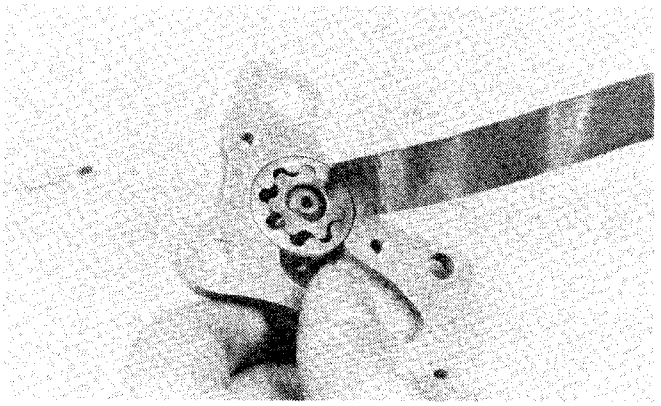

Measure the outer rotor-to-inner rotor tip clearance.

SERVICE LIMIT: 0.20 mm (0.008 in)

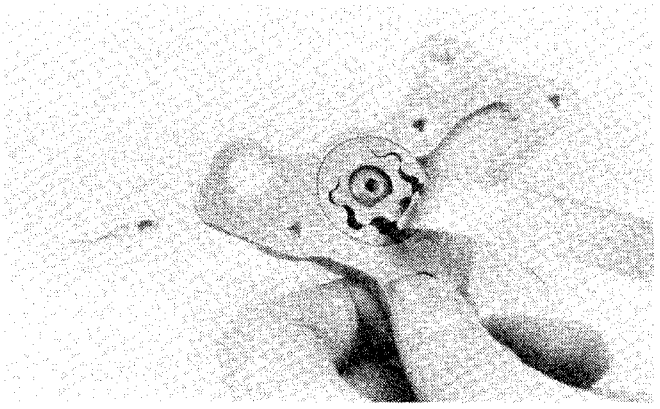

'85, '86:
Check the rotor-to-pump body clearance.

SERVICE LIMIT: 0.12 mm (0.005 in)

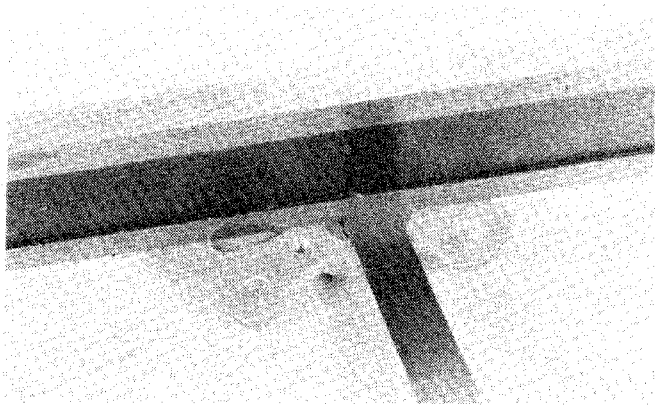

After '86:
Check the rotor-to-pump body clearance with a new gasket attached.

NOTE

- For accurate measurement, make sure the pump body surface is clean and a new gasket is used.

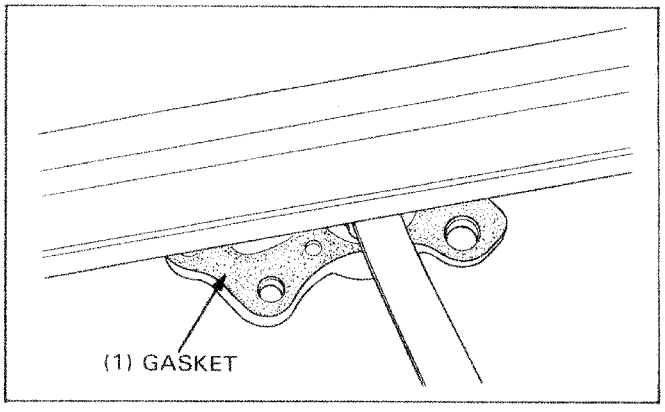

OIL PUMP ASSEMBLY

Install the outer and inner rotors into the pump body.

NOTE

- Insert the pump shaft by aligning the flat of the shaft with the inner rotor.

After '86:
Install the new gasket on the pump body.

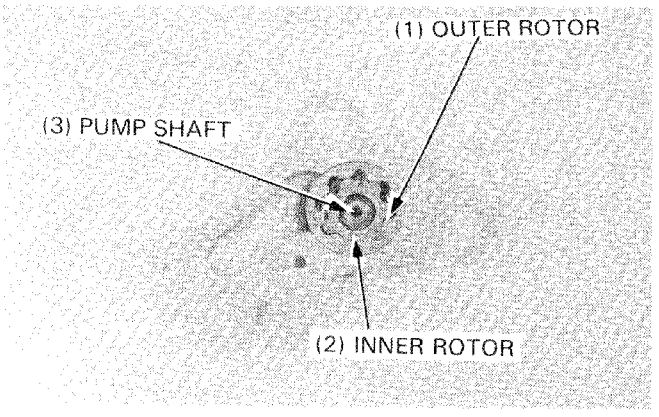

Install the pump cover with the three screws.

NOTE

- Make sure that the pump shaft rotates freely without binding.

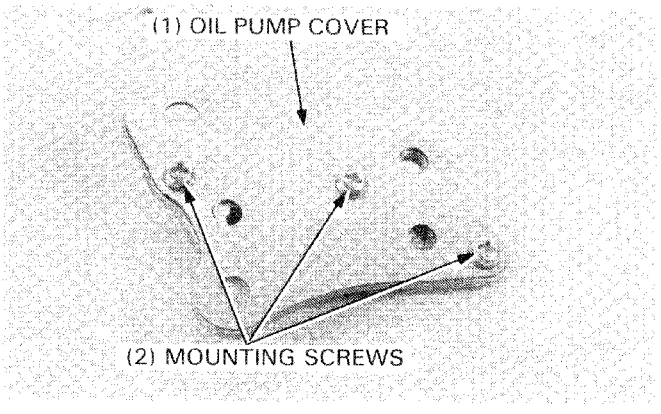

OIL PUMP INSTALLATION

Install the new O-rings in the right crankcase.

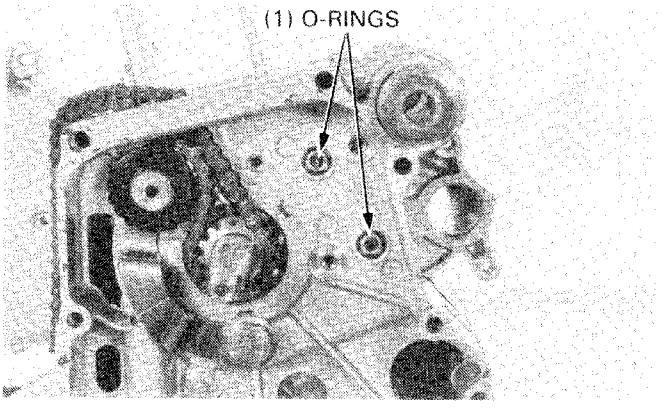

Install the oil pump and tighten the screws.

NOTE

- Be careful not to pull the pump shaft out.

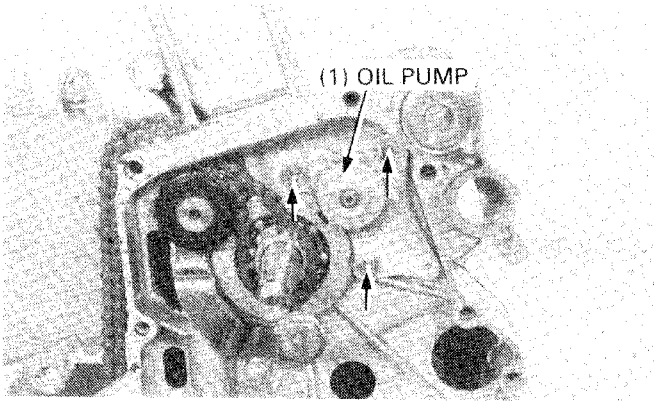

Install the pump sprocket.

NOTE

- The pump shaft has left hand threads.

Install the right crankcase cover.

TORQUE: 9—12 N·m (0.9—1.2 kg-m, 7—9 ft-lb)

NOTE

- Clean the oil filter screen before installing the right crankcase cover.

Install the removed parts in the reverse order of removal and install the engine in the frame.

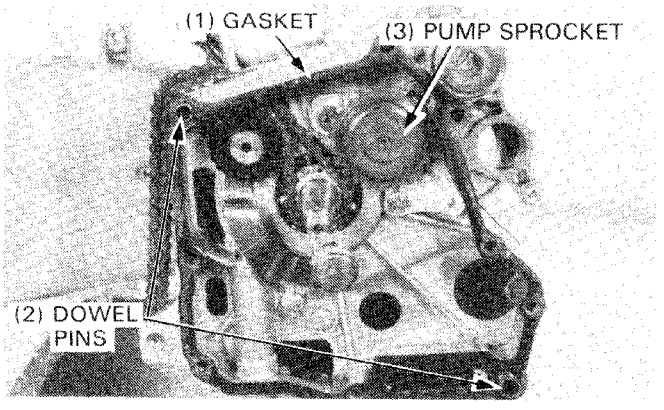

TRANSMISSION OIL

OIL LEVEL CHECK

Place the scooter on its stand on level ground.
Stop the engine and remove the transmission oil check bolt.
The oil level should be at the oil check bolt hole.
If the level is low, fill the final reduction case with the recommended oil (page 2-1).
Install the oil check bolt.

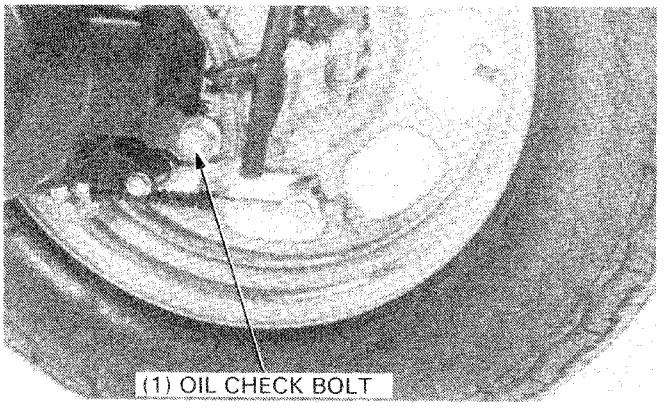

OIL CHANGE

Remove the oil check bolt.
Remove the oil drain bolt and drain the oil thoroughly.
Make sure that the drain bolt sealing washer is in good condition.
Reinstall the drain bolt.

TORQUE: 10—14 N·m (1.0—1.4 kg-m, 7—10 ft-lb)

Fill the final reduction case with the recommended oil (page 2-1), through the oil check bolt hole up to the bolt hole.

CAPACITY: 150 cc (5.1 US oz, 0.26 Imp qt)

Make sure that the oil check bolt sealing washer is in good condition and reinstall the oil check bolt.
Start the engine and test ride for 2—3 minutes.
Stop the engine and check the oil level.
Make sure that there are no oil leaks.

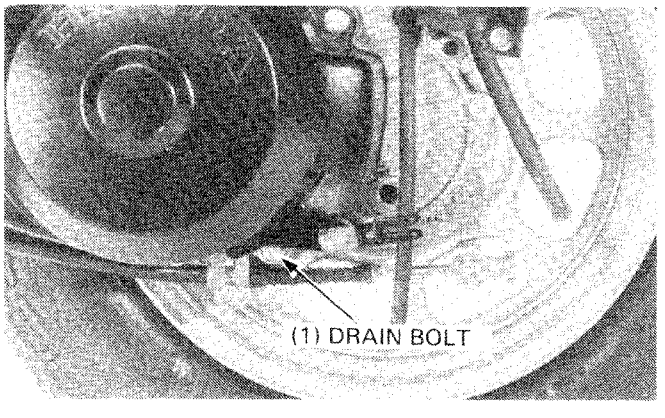

LUBRICATION POINTS

CONTROL CABLES

Periodically, disconnect the throttle and brake cables at their upper ends. Thoroughly lubricate the cables and their pivot points with a commercially available cable lubricant or a light weight oil.

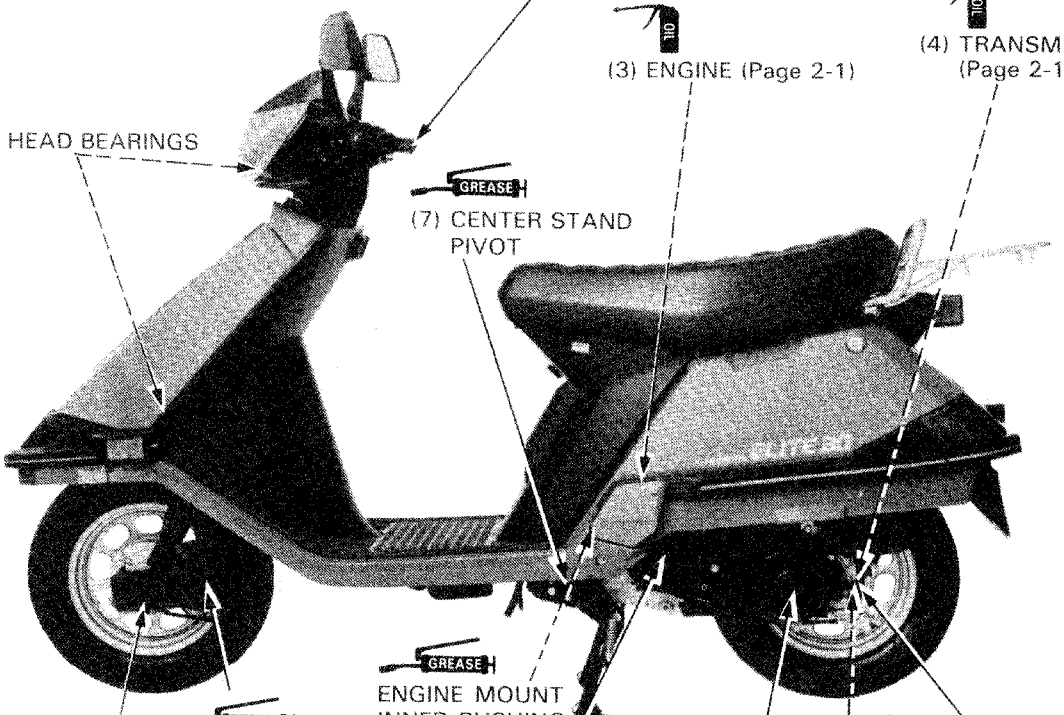

SERVICE INFORMATION	3-1	IGNITION TIMING	3-7
MAINTENANCE SCHEDULE	3-2	BELT CASE/AIR CLEANER	3-8
FUEL LINES	3-4	BRAKE SHOE	3-8
FUEL FILTER	3-4	BRAKE SYSTEM	3-9
THROTTLE OPERATION	3-4	BRAKE LIGHT SWITCH	3-9
AIR CLEANER	3-5	HEADLIGHT AIM	3-10
CRANKCASE BREATHER	3-5	CLUTCH SHOE INSPECTION	3-10
SPARK PLUG	3-6	SUSPENSION	3-10
VALVE CLEARANCE	3-6	NUTS, BOLTS, FASTENERS	3-11
CARBURETOR IDLE SPEED	3-7	WHEELS	3-11
EVAPORATIVE EMISSION		STEERING HEAD BEARINGS	3-11
CONTROL SYSTEM	3-7		

SERVICE INFORMATION

GENERAL

Engine oil	See page 2-2
Engine oil strainer screen	See page 2-3
Transmission (final reduction) oil	See page 2-7

SPECIFICATIONS

Engine

Throttle grip free play	2—6 mm (1/8—1/4 in)
Spark plug Standard	CR7HS (NGK), U22FSR-U (NIPPONDENSO)
For cold climate (below 5°C/41°F)	CR6HS (NGK), U20FSR-U (NIPPONDENSO)
For extended high speed riding	CR8HS (NGK), U24FSR-U (NIPPONDENSO)
Plug gap	0.6—0.7 mm (0.024—0.028 in)
Ignition timing	
— At idle	18° BTDC
— Advance starts	18° BTDC at 2,400 rpm
— Full advance	27° BTDC at 3,000 rpm
Idle speed	1,700 ± 100 rpm

Chassis

Front brake free play	10—20 mm (3/8—3/4 in)
Rear brake free play	10—20 mm (3/8—3/4 in)

Tire:

		FRONT	REAR
Tire size		3.50-10-4PR	3.50-10-4PR
Cold tire pressure	Up to vehicle capacity load	150 kPa (1.50 kg/cm², 22 psi)	225 kPa (2.25 kg/cm², 33 psi)
	Up to 90 kg (200 lbs.) load	150 kPa (1.50 kg/cm², 22 psi)	175 kPa (1.75 kg/cm², 25 psi)
Tire brand	DUNLOP	K 398	K 398
	INOUE	3R	3R
	BRIDGESTONE	ML2	ML2
	KIK	MB3	MB3

TOOLS

Common

Wrench, 8 x 9 mm	07708—0030100 Equivalent commercially available in U.S.A.
Adjusting wrench	07708—0030400 or Valve adjustment wrench 07908—KE90200

MAINTENANCE SCHEDULE

'85:
Perform the Pre-ride Inspection in the Owner's Manual at each scheduled maintenance period.
I: Inspect and Clean, Adjust, Lubricate, or Replace if necessary.
C: Clean. R: Replace.

		ITEM \ FREQUENCY	WHICHEVER COMES FIRST ➡ EVERY		ODOMETER READING (NOTE 4) 600 mi (1,000 km)	2,500 mi (4,000 km)	5,000 mi (8,000 km)	7,500 mi (12,000 km)	Refer to page
EMISSION RELATED ITEMS	*	FUEL LINES			I	I	I		3-4
	*	FUEL FILTER					R		3-4
	*	THROTTLE OPERATION			I	I	I		3-4
		AIR CLEANER	NOTE 1		Replace every 12,500 mi (20,000 km)				3-5
		CRANKCASE BREATHER	NOTE 2		C	C	C		3-5
		SPARK PLUG			R	R	R		3-6
	*	VALVE CLEARANCE		I	I	I	I		3-6
		ENGINE OIL	YEAR	R	Replace every 1,000 mi (1,600 km)				2-2
	**	ENGINE OIL FILTER SCREEN				C			2-3
	*	CARBURETOR-IDLE SPEED		I	I	I	I		3-7
	*	EVAPORATIVE EMISSION CONTROL SYSTEM	NOTE 3				I		3-7
NON-EMISSION RELATED ITEMS	*	TRANSMISSION OIL	2 YEARS R*						2-7
		BELT CASE/AIR CLEANER	NOTE 1		C	C	C		3-8
		BRAKE SHOE WEAR			I	I	I		3-8
		BRAKE SYSTEM		I	I	I	I		3-9
	*	BRAKE LIGHT SWITCH			I	I	I		3-9
		STARTER LIMIT SWITCH			I	I	I		——
	*	HEADLIGHT AIM			I	I	I		3-10
	**	CLUTCH SHOE WEAR			I	I	I		3-10
	*	SUSPENSION			I	I	I		3-10
	**	NUTS, BOLTS, FASTENERS		I	I	I	I		3-11
	**	WHEELS			I	I	I		3-11
	**	STEERING HEAD BEARINGS		I			I		3-11

* SHOULD BE SERVICED BY AN AUTHORIZED HONDA DEALER, UNLESS THE OWNER HAS PROPER TOOLS AND SERVICE DATA AND IS MECHANICALLY QUALIFIED.

** IN THE INTEREST OF SAFETY, WE RECOMMEND THESE ITEMS BE SERVICED ONLY BY AN AUTHORIZED HONDA DEALER.

NOTE
1. Service more frequently when riding in dusty areas.
2. Service more frequently when riding in rain or at full throttle.
3. California type only.
4. For higher odometer readings, repeat at the frequency interval established here.

After '85:

I: Inspect and Clean, Adjust, Lubricate or Replace if necessary.
C: Clean. R: Replace. A: Adjust. L: Lubricate.

		ITEM \ FREQUENCY	WHICHEVER COMES FIRST ↓ EVERY	ODOMETER READING (NOTE 4) →	600 mi (1,000 km)	2,500 mi (4,000 km)	5,000 mi (8,000 km)	7,500 mi (12,000 km)	Refer to page
EMISSION RELATED ITEMS	*	FUEL LINES			I	I	I		3-4
	*	THROTTLE OPERATION			I	I	I		3-4
		AIR CLEANER	NOTE 1				R		3-5
		CRANKCASE BREATHER	NOTE 2		C	C	C		3-5
		SPARK PLUG			R	R	R		3-6
	*	VALVE CLEARANCE		I	I	I	I		3-6
		ENGINE OIL	YEAR	R	Replace every 1,000 mi (1,600 km)				2-2
	*	ENGINE OIL STRAINER SCREEN					C		2-3
	*	CARBURETOR-IDLE SPEED		I	I	I	I		3-7
	*	EVAPORATIVE EMISSION CONTROL SYSTEM	NOTE 3				I		3-7
NON-EMISSION RELATED ITEMS		BELT CASE/AIR CLEANER	NOTE 1		C	C	C		3-8
		BRAKE SHOE WEAR			I	I	I		3-8
		BRAKE SYSTEM		I	I	I	I		3-9
	*	BRAKE LIGHT SWITCH			I	I	I		3-9
	*	HEADLIGHT AIM			I	I	I		3-10
	**	CLUTCH SHOE WEAR				I			3-10
	*	SUSPENSION			I	I	I		3-10
	*	NUTS, BOLTS, FASTENERS		I		I			3-11
	**	WHEELS			I	I	I		3-11
	**	STEERING HEAD BEARINGS		I			I		3-11

* SHOULD BE SERVICED BY AN AUTHORIZED HONDA DEALER, UNLESS THE OWNER HAS PROPER TOOLS AND SERVICE DATA AND IS MECHANICALLY QUALIFIED.

** IN THE INTEREST OF SAFETY, WE RECOMMEND THESE ITEMS BE SERVICED ONLY BY AN AUTHORIZED HONDA SCOOTER DEALER.

NOTE

1. Service more frequently when riding in dusty areas.
2. Service more frequently when riding in rain or at full throttle.
3. California type only.
4. For higher odometer reading, repeat at the frequency interval established here.

FUEL LINES

Remove the right side cover (Section 12).
Check the fuel lines and replace any parts which show signs of deterioration, damage or leakage.

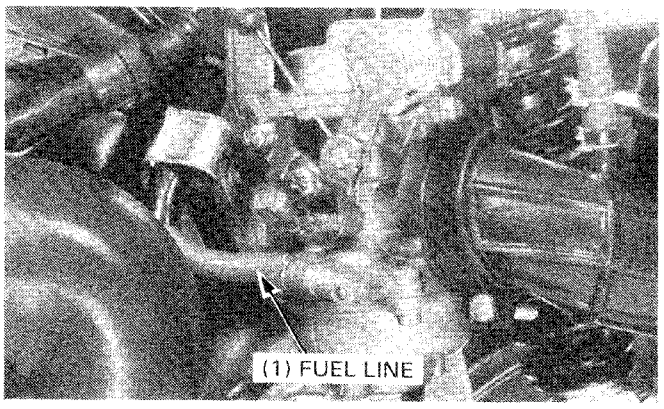

FUEL FILTER

'85:

WARNING

- *Gasoline is flammable and is explosive under certain conditions.*
  Do not smoke or allow flames or sparks in your working area.

Replace the fuel filter with a new one when indicated by the maintenance schedule (page 3-2).
Remove the right side cover (Section 12).
Remove the fuel tank under cover.
Disconnect the fuel lines from the fuel filter.
Replace the fuel filter and install with its arrow mark toward the fuel flow direction.

After installing, check for fuel leaks.

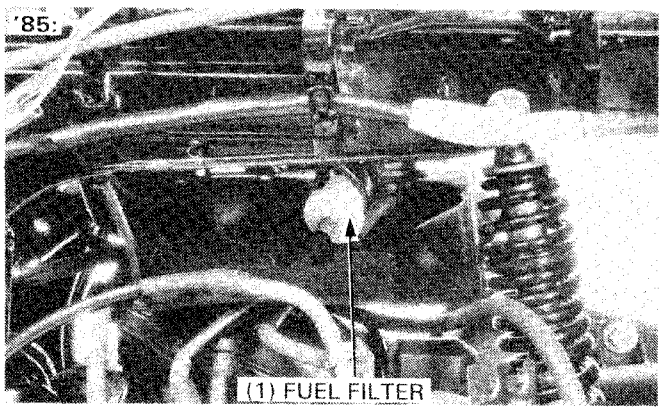

THROTTLE OPERATION

Check for smooth throttle grip full opening and automatic full closing in all steering positions.
Inspect the throttle cable for kinking or other damage.
Lubricate the throttle cable (page 2-7).
Measure the throttle grip free play at the throttle grip flange.

FREE PLAY: 2—6 mm (1/8—1/4 in)

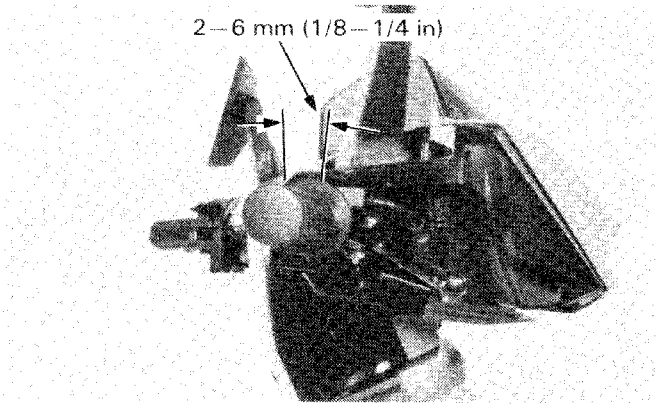

Adjustment can be made at either end of the throttle cable.
Minor adjustments are made with the upper adjuster.
Slide the rubber cover out and adjust by loosening the lock nut and turning the adjuster.

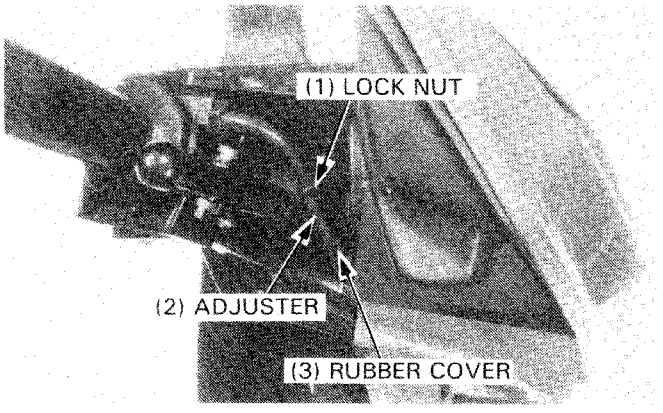

Major adjustments are made with the lower adjusting nut. Remove the frame center cover (Section 12) and adjust by loosening the lock nut and turning the adjusting nut.

Tighten the lock nut and recheck throttle operation.

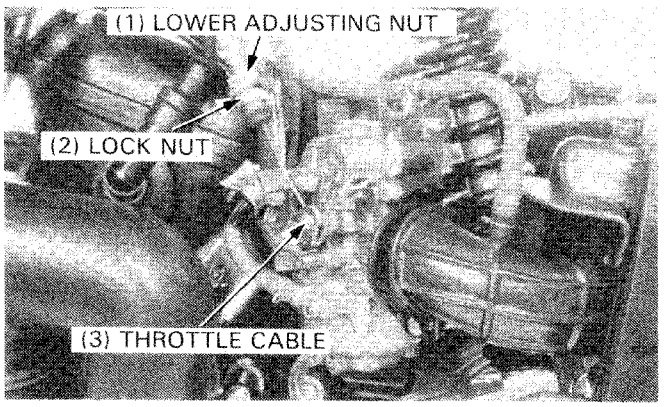

AIR CLEANER

Remove the left side cover (Section 12).
Remove the three air cleaner housing cover screws and cover.

Remove the air cleaner element and discard it in accordance with the maintenance schedule.
Also replace the air cleaner any time it is excessively dirty or damaged.

NOTE

- The air cleaner is of a viscous type paper element. Do not try to clean.

Install the air cleaner and air cleaner housing cover and tighten the three screws.
Install the left side cover.

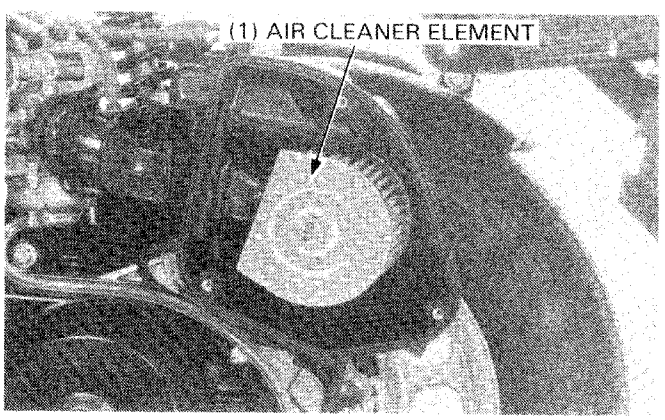

CRANKCASE BREATHER

Remove the plug and drain any residue.

NOTE

- Service more frequently when ridden in rain or at full throttle or if the deposit level can be seen in the transparent section of the drain tube.

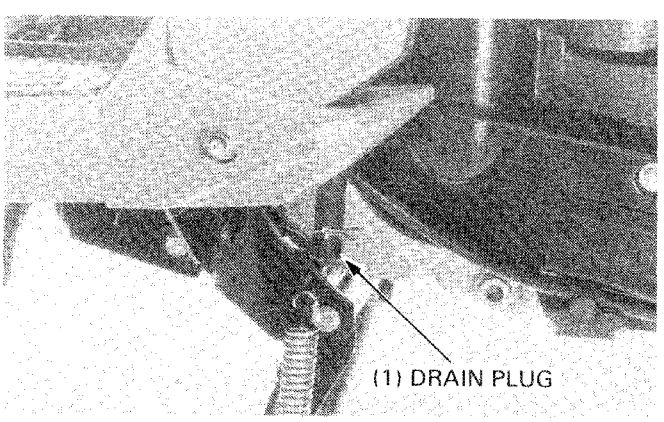

SPARK PLUG

Disconnect the spark plug cap and clean any dirt from around the spark plug base.
Remove and discard the spark plug.
Measure the new spark plug gap with a wire-type feeler gauge.
Adjust the gap by carefully bending the side electrode.

SPARK PLUG GAP: 0.6–0.7 mm (0.024–0.028 in)

RECOMMENDED SPARK PLUG:

For cold climate (below 5°C/41°F)	CR6HS	NGK
	U20FSR-U	ND
Standard	CR7HS	NGK
	U22FSR-U	ND
For extended high speed riding	CR8HS	NGK
	U24FSR-U	ND

Make sure the sealing washer is in good condition.
Install the spark plug and tighten it by hand. Then tighten with a spark plug wrench.
Connect the spark plug cap.

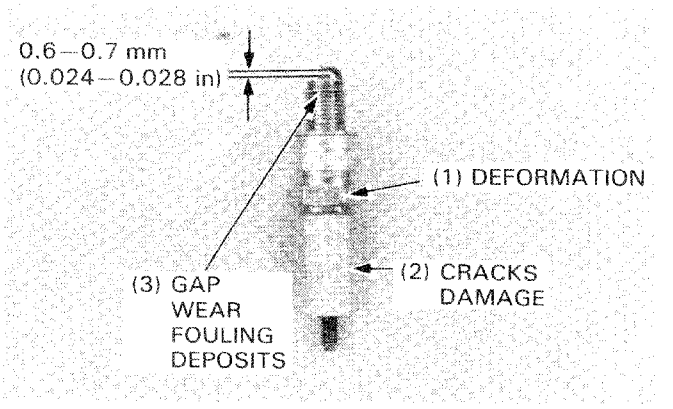

VALVE CLEARANCE

NOTE

- Inspect and adjust valve clearance while the engine is cold (below 35°C/95°F).

Remove the left and right side covers.
Remove the fan cover.
Remove the cylinder head cover.
Rotate the flywheel and align the "T" mark with the index mark at TDC (Top Dead Center).

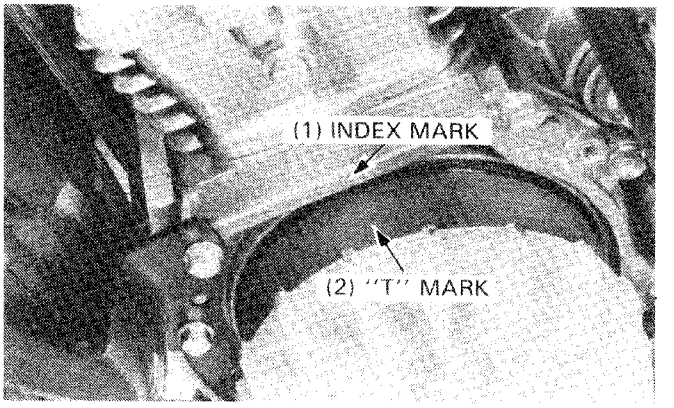

Check the valve clearance by inserting a feeler gauge between the rocker arm and valve stem.

NOTE

- When checking the clearance, slide the feeler gauge in the arrow direction as shown.

VALVE CLEARANCES:
INTAKE: 0.05 mm (0.002 in)
EXHAUST: 0.05 mm(0.002 in)

Adjust by loosening the lock nut and turning the adjusting screw until there is a slight drag on the feeler gauge.
Hold the adjusting screw and tighten the lock nut.
Recheck the valve clearance.
Install removed parts in the reverse order of disassembly.

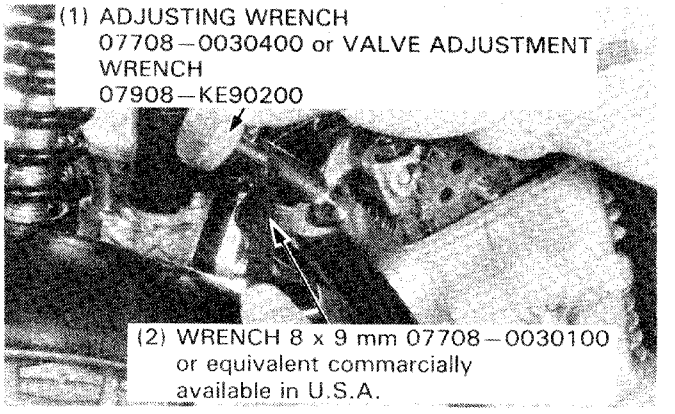

CARBURETOR IDLE SPEED

NOTE

- Inspect and adjust idle speed after all other engine adjustments are within specifications.
- The engine must be at normal operating temperature for accurate idle inspection and adjustment. Ten minutes of stop and go riding is sufficient.

Remove the inspection cover from the center cover.
Remove the right and left side covers (Section 12).
Warm up the engine and place the motorcycle on its center stand.
Connect a tachometer according to the tachometer manufacturer's instructions.
Turn the throttle stop screw to obtain the specified idle speed.

IDLE SPEED: 1,700 ± 100 rpm

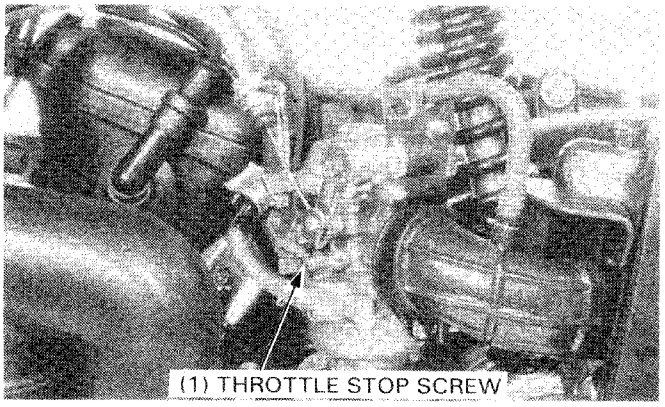

EVAPORATIVE EMISSION CONTROL SYSTEM

(California model only)

Check the hoses between the crankcase breather separator, fuel tank, evaporative emission canister, and air cleaner for damage or loose connections.
Replace if necessary.

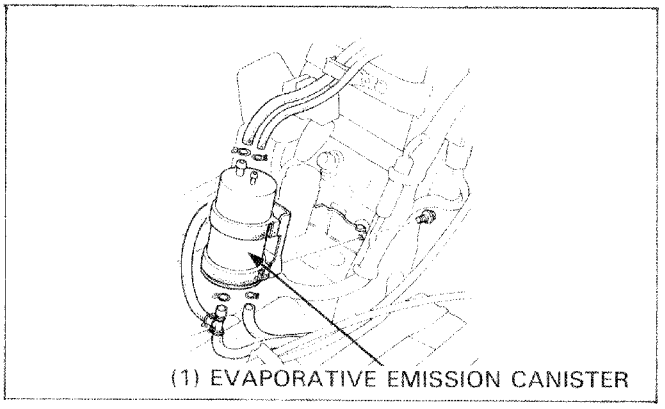

IGNITION TIMING

NOTE

- The ignition control module system is factory pre-set and cannot be adjusted. Ignition timing inspection procedures are given to inspect the function of the ignition control module components.

Remove the right side cover (page 12-2).
Remove the fan cover.
Connect a tachometer and timing light according to the component manufacturer's instructions.
Start the engine.

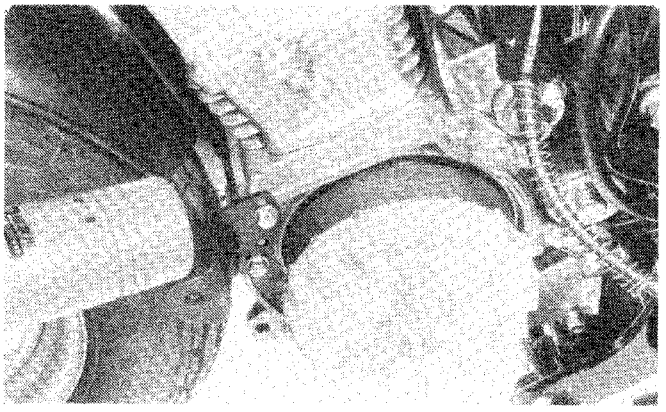

The ignition timing at idle is correct if the index mark aligns with the "F" mark at idle of 1,700 rpm.

To check the advance, raise the engine speed to 3,000 rpm; the index mark should align with the advance mark.

If the ignition timing is incorrect, check the ignition control module, ignition pulse generator rotor and ignition pulse generator, and replace faulty parts. Refer to Section 15, Electrical Equipment.

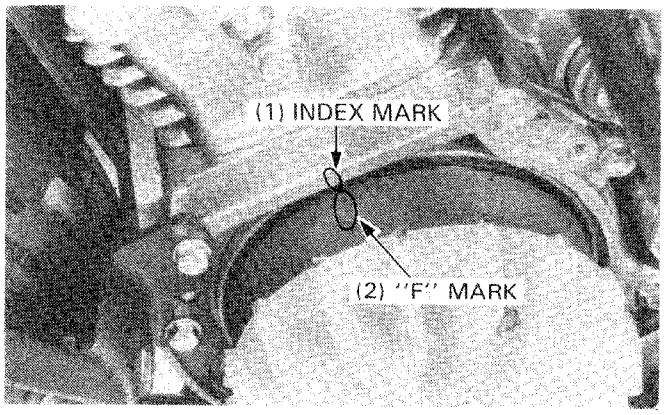

BELT CASE/AIR CLEANER

Loosen the air duct band screw.
Remove the air duct.

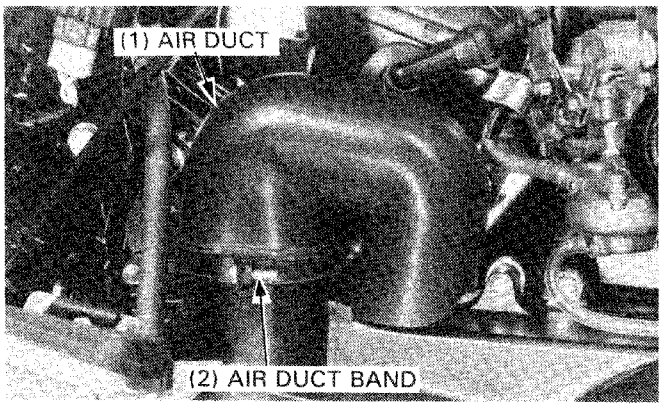

Remove the belt case air cleaner element.

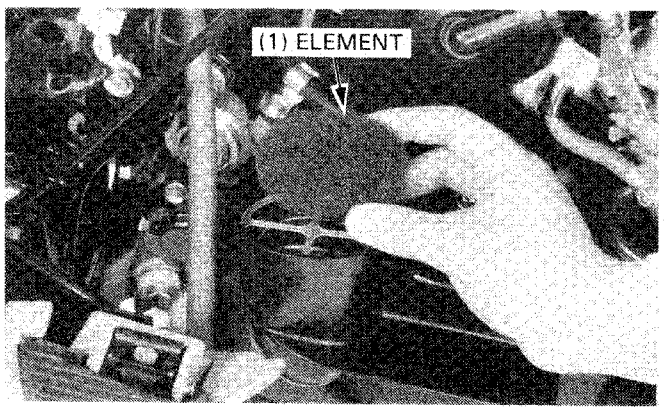

Wash the element in non-flammable or high flash point solvent, and let it dry.

Installation is the reverse order of disassembly.

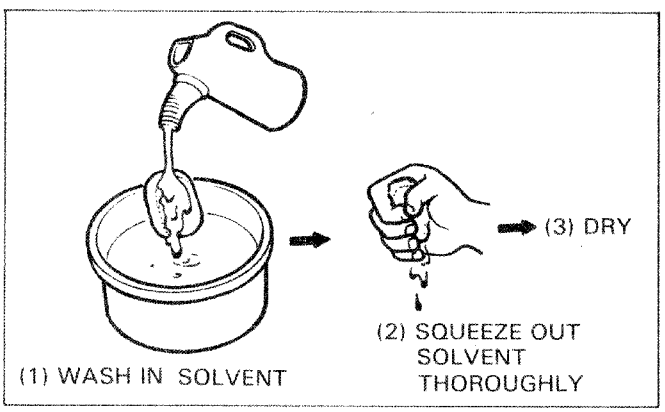

BRAKE SHOE

Replace the brake shoes if the arrow on the brake arm aligns with the reference mark "Δ" when the brake is fully applied.

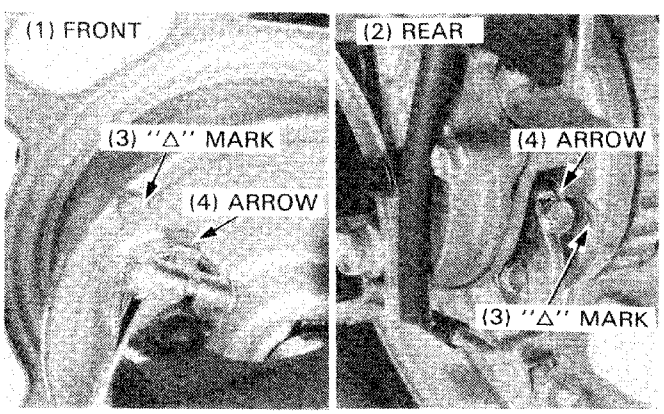

BRAKE SYSTEM

Measure the front and rear brake lever free play at the tip of the brake lever.

FREE PLAY: 10—20 mm (3/8—3/4 in)

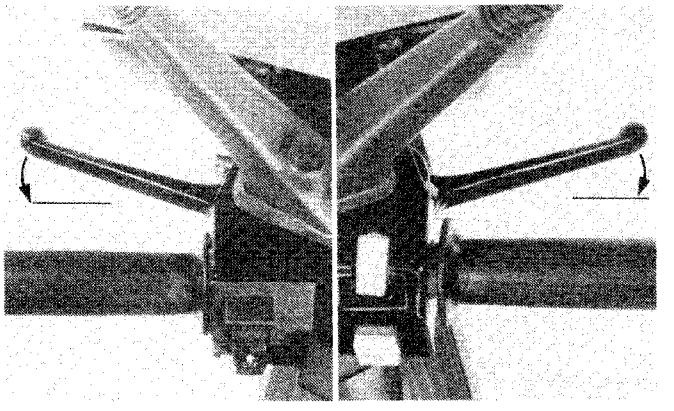

FRONT BRAKE

If adjustment is necessary, turn the front brake adjusting nut.

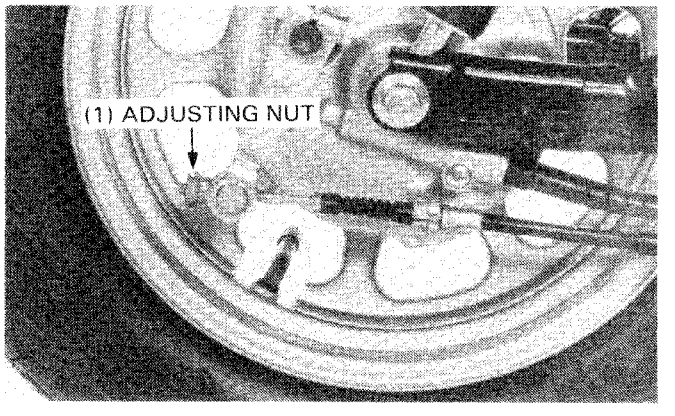

REAR BRAKE

If adjustment is necessary, turn the rear brake adjusting nut.

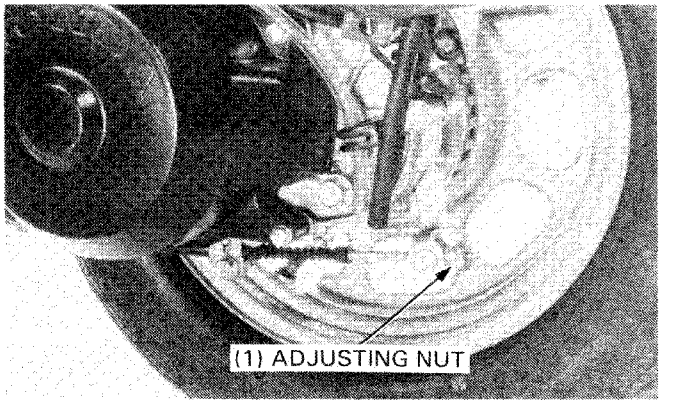

BRAKE LIGHT SWITCH

Inspect the brake light switch so that the brake light will come on when the brake engagement begins.

If the brake lever free play is within the specification, replace the brake light switch.

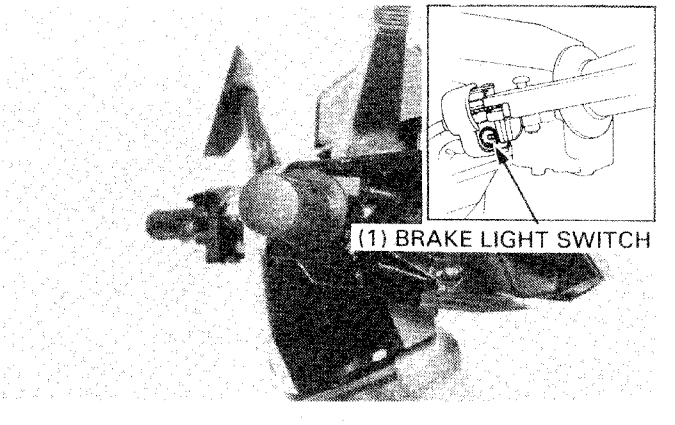

HEADLIGHT AIM

Adjust vertically by turning the adjusting screw through the hole of the front cover.

Adjust horizontally by turning the adjusting screw on the headlight rim.

NOTE

- Adjust the headlight beam as specified by local laws and regulations.

WARNING

- *An improperly adjusted headlight may blind oncoming drivers, or it may fail to light the road for a safe distance.*

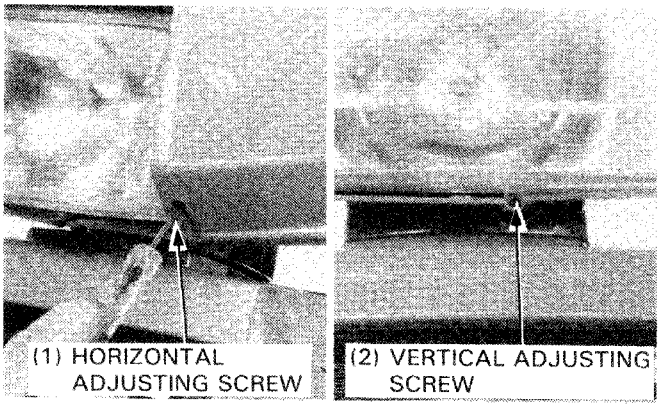

CLUTCH SHOE INSPECTION

Start the engine and check the clutch operation by increasing the engine speed gradually.

If the scooter tends to creep, or the engine stalls, check the clutch shoes for wear and replace if necessary (page 8-10).

SUSPENSION

WARNING

- *Do not ride a scooter with faulty suspension. Loose, worn or damaged suspension parts impair scooter stability and control.*

FRONT

Check the action of the fork/shocks by compressing them several times.
Check the entire fork assembly for damage.
Replace damaged components which cannot be repaired.
Tighten all nuts and bolts.

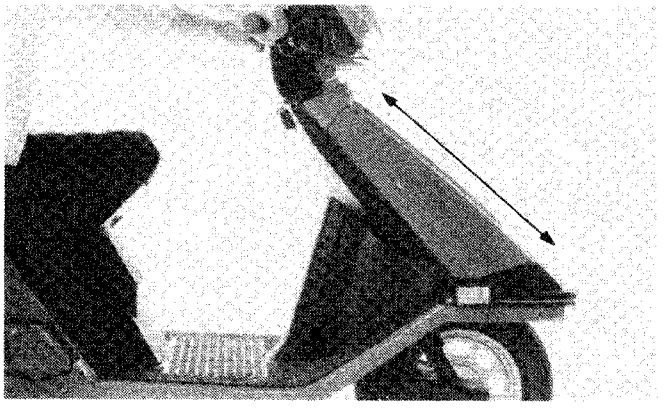

REAR

Place the scooter on its center stand.
Move the rear wheel sideways with force to see if the engine hanger bushings are worn.
Replace the hanger bushings if there is any looseness.

Check the shock absorber for damage.
Tighten all rear suspension nuts and bolts.

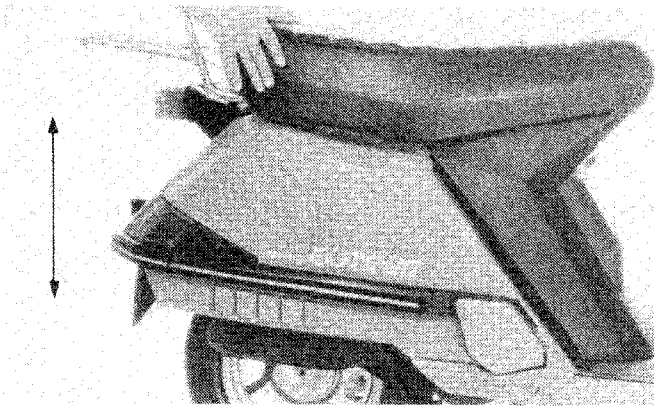

NUTS, BOLTS, FASTENERS

Check that all chassis nuts and bolts are tightened to their correct torque values (Section 1) at the intervals shown in the Maintenance Schedule (pages 3-2, 3-3).
Check all cotter pins, safety clips, hose clamps and cable stays.

WHEELS/TIRES

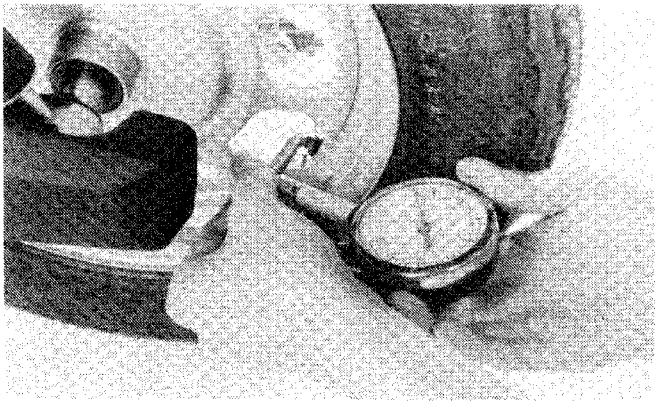

NOTE

- Tire pressure should be checked when tires are COLD.

Check the tires for cuts or other damage.

RECOMMENDED TIRE AND PRESSURE:

		FRONT	REAR
Tire size		3.50-10-4 PR	3.50-10-4 PR
Cold tire pressure kPa (kg/c m², psi)	Up to vehicle capacity load	150 (1.50, 22)	225 (2.25, 33)
	Up to 90kg (200 lbs) load	150 (1.50, 22)	175 (1.75, 25)
Tire brand	DUNLOP	K398	K398
	INOUE	3R	3R
	BRIDGESTONE	ML2	ML2

Check that the front and rear wheels are as specified above.
Measure the tread depth at the center of the tires.
Replace the tires if the tread depth reaches the following limits.

Minimum tread depth:
Front: 1.5 mm (0.06 in)
Rear: 2.0 mm (0.08 in)

STEERING HEAD BEARINGS

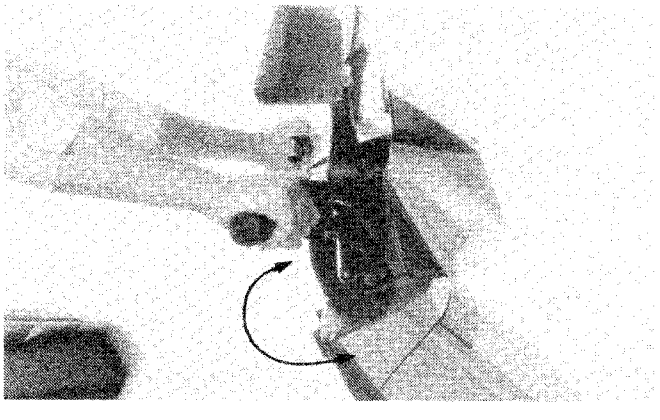

NOTE

- Check that the control cables do not interfere with handlebar rotation.

Raise the front wheel off the ground and check that the handlebar rotates freely.

If the handlebar moves unevenly, binds, or has vertical movement, adjust the steering head bearing by adjusting the steering head adjusting nut(page 13-22).

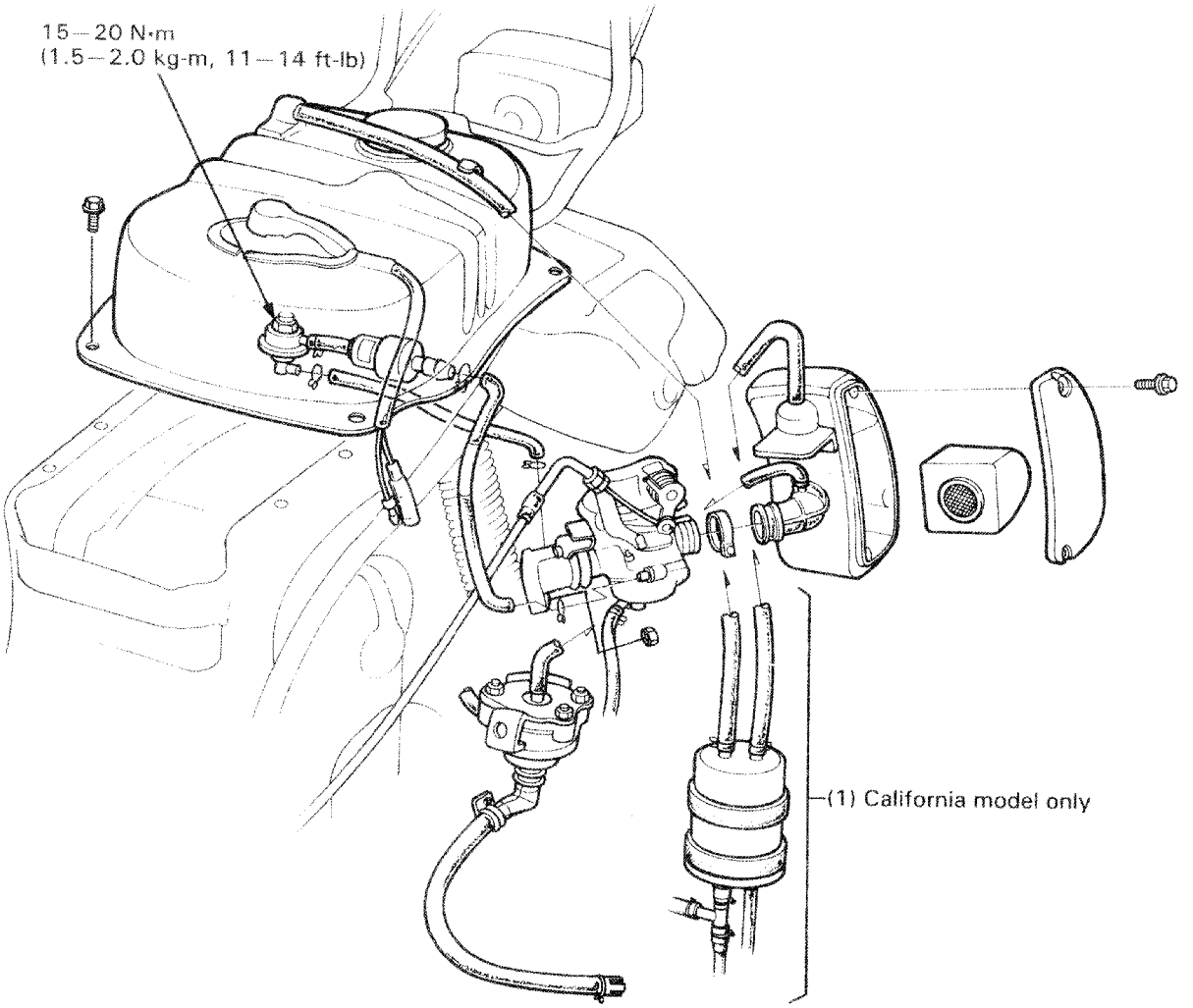
15—20 N·m
(1.5—2.0 kg-m, 11—14 ft-lb)
(1) California model only

4. FUEL SYSTEM

SERVICE INFORMATION	4-1	AIR SCREW	4-10
TROUBLESHOOTING	4-2	HIGH ALTITUDE ADJUSTMENT	4-11
CARBURETOR REMOVAL	4-3	AUTOMATIC FUEL VALVE	4-12
STARTING ENRICHMENT THERMAL VALVE	4-3	FUEL TANK	4-12
VACUUM CHAMBER	4-5	AIR CLEANER HOUSING	4-15
FLOAT CHAMBER	4-7	CRANKCASE BREATHER	4-16
FLOAT LEVEL INSPECTION	4-9	EVAPORATIVE EMISSION CONTROL SYSTEM (California model only)	4-17
CARBURETOR INSTALLATION	4-10		

SERVICE INFORMATION

GENERAL

WARNING

- *Gasoline is extremely flammable and is explosive under certain conditions. Work in a well ventilated area. Do not smoke or allow flames or sparks in the work area or where gasoline is stored.*
- *Bending or twisting the control cables will impair smooth operation and could cause the cables to stick or bind, resulting in loss of vehicle control.*

- When disassembling fuel system parts, note the locations of the O-rings. Replace them with new ones on reassembly.
- Loosen the drain bolt and drain the residual gasoline from the float chamber before disassembling.

NOTE

- If the vehicle is to be stored for more than one month, drain the float bowl. Fuel left in the float bowl may cause clogged jets resulting in hard starting or poor driveability.

SPECIFICATIONS

ITEM	STANDARD	
	'85	AFTER '85
Venturi diameter	16.0 mm (0.63 in)	16.0 mm (0.63 in)
Identification No.	VC61A	VC61C
Float level	10.7 mm (0.42 in)	10.7 mm (0.42 in)
Air screw initial opening	1-7/8 turns out	1-1/2 turns out
Main jet	#88	#88
Slow jet	#40	#40
Starter jet	#40	#40

TORQUE VALUES

Seat hinge	5—9 N•m (0.5—0.9 kg-m, 4—7 ft-lb)
Automatic fuel valve	15—20 N•m (1.5—2.0 kg-m, 11—14 ft-lb)
Carrier	20—30 N•m (2.0—3.0 kg-m, 14—22 ft-lb)
Carburetor insulator band	2—4 N•m (0.2—0.4 kg-m, 1—3 ft-lb)
Fuel tank insulator	0.5—1.5 N•m (0.05—0.15 kg-m, 0.4—1.1 ft-lb)

TOOLS

Special

Vacuum/pressure pump	A937X-041-XXXXX
or	
Vacuum pump	ST-AH-260-MC7 (U.S.A. only)

Common

Float level gauge	07401—0010000

TROUBLESHOOTING

Engine cranks but won't start
- No fuel in tank
- No fuel to carburetor
- Starting enrichment thermal valve stuck closed
- Air cleaner clogged
- Clogged fuel filter
- Fuel cap vent blocked

Rough idle
- Idle speed incorrect
- Rich mixture
- Lean mixture
- Air cleaner clogged
- Intake air leak
- Fuel contaminated

Poor performance (driveability) during acceleration
- Damaged vacuum piston diaphragm

Lean mixture
- Clogged fuel jet
- Fuel cap vent blocked
- Clogged fuel filter
- Restricted fuel line
- Faulty float valve
- Float level low

Rich mixture
- Starting enrichment thermal valve stuck closed
- Faulty float valve
- Float level too high
- Clogged air jets
- Faulty float valve

CARBURETOR REMOVAL

Remove the right and left side covers and body center cover (Section 12).
Disconnect the fuel line at the carburetor.
Disconnect the vacuum line from the carburetor.
Disconnect the starting enrichment thermal valve wire connector.
Loosen the throttle cable adjusting nut and lock nut and disconnect the throttle cable from the carburetor.

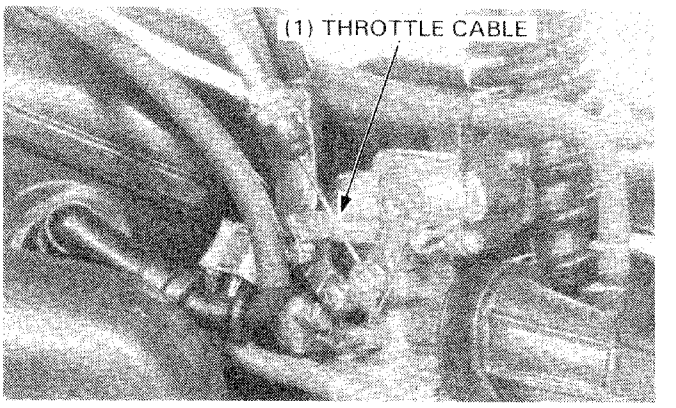

Loosen the air cleaner connecting tube band.
Remove the carburetor mounting nuts.
Remove the carburetor.

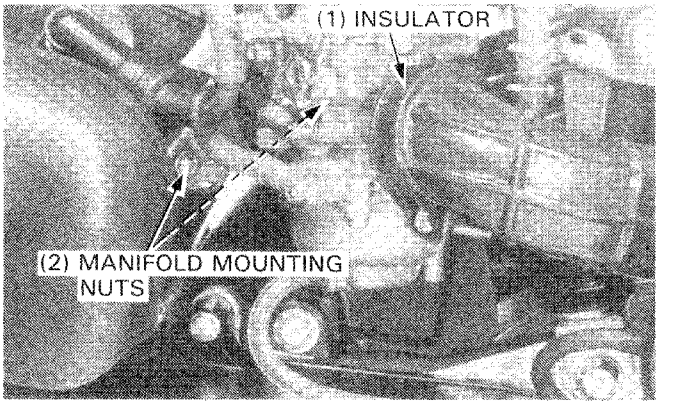

STARTING ENRICHMENT THERMAL VALVE

INSPECTION

Stop the engine and allow it cool for 10 minutes or more.
Disconnect the starting enrichment thermal valve wire connectors and measure resistance between the wire terminals.

RESISTANCE: 10 ohm max.
(10 minutes min. after stopping the engine)

If the reading is not within the limit, replace the starting enrichment thermal valve with a new one.
If the resistance meets the specification, perform the following tests.
Remove the carburetor and allow it to cool for 30 minutes.
Connect a pressure tester to the enrichening circuit. Apply pressure to the circuit. If the passage is blocked, replace the starting enrichment thermal valve.

Connect a 12 V battery to the starting enrichment thermal valve wires and wait for 5 minutes. Connect a pressure tester to the fuel enrichening circuit and apply pressure to it. Replace the starting enrichment thermal valve if there is no restriction to the applied pressure.

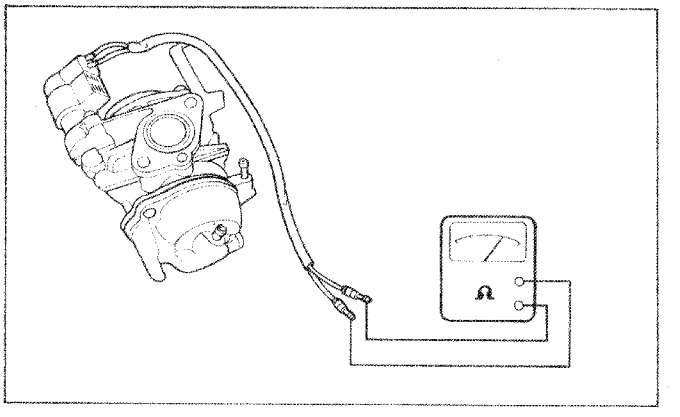

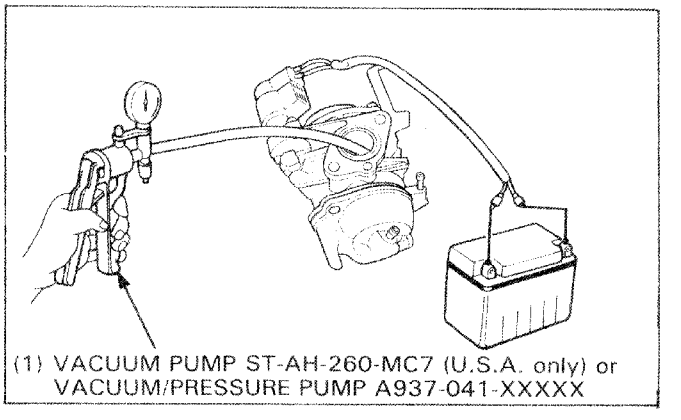

REMOVAL

Remove the starting enrichment thermal valve cover.

'86–'88 SHOWN:

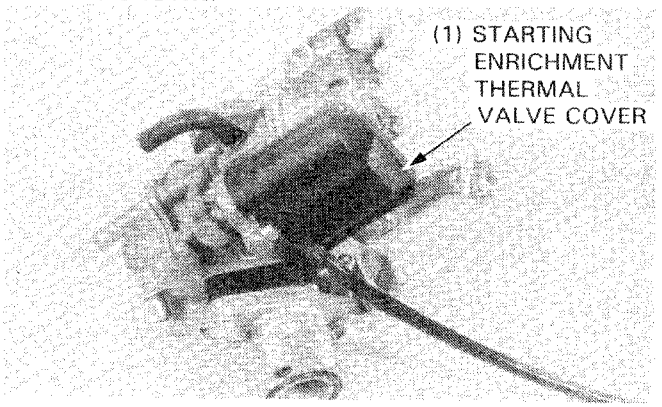

Remove the set plate screws, set plate and starting enrichment thermal valve from the carburetor.

'86–'88 SHOWN:

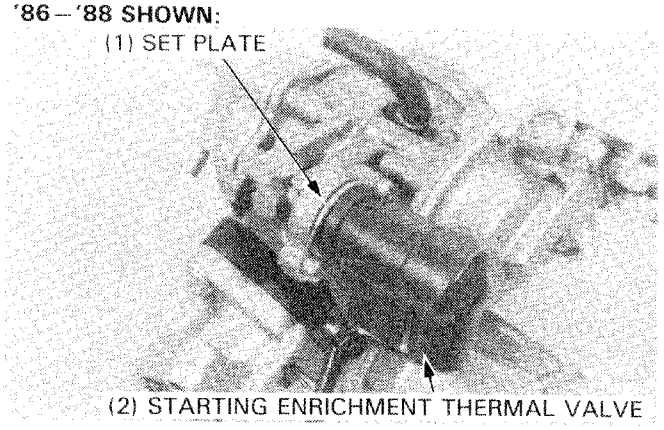

STARTING ENRICHMENT THERMAL VALVE INSPECTION

Check the starting enrichment thermal valve and needle for nicks, wear, scratches or other damage.

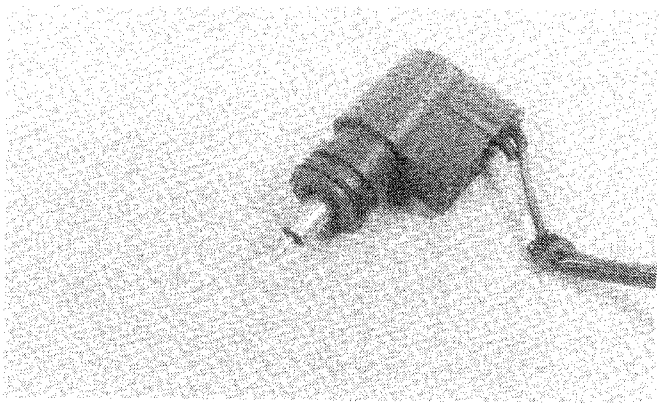

INSTALLATION

Insert the starting enrichment thermal valve into the carburetor body untill it bottoms.
Position the set plate into the upper groove in the starting enrichment thermal valve with its round face toward the carburetor body.
Install and tighten the two screws.

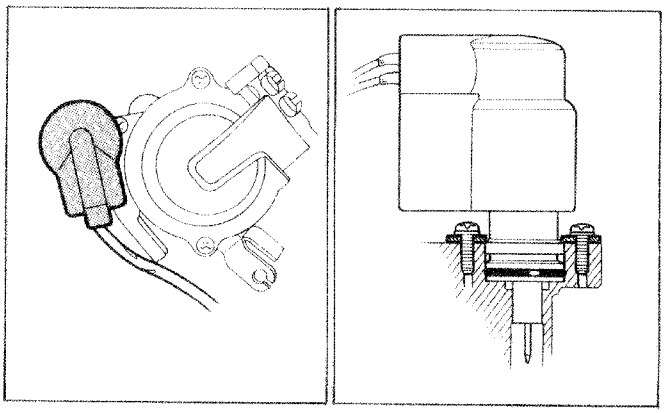

Install the starting enrichment thermal valve cover.

'86—'88 SHOWN:

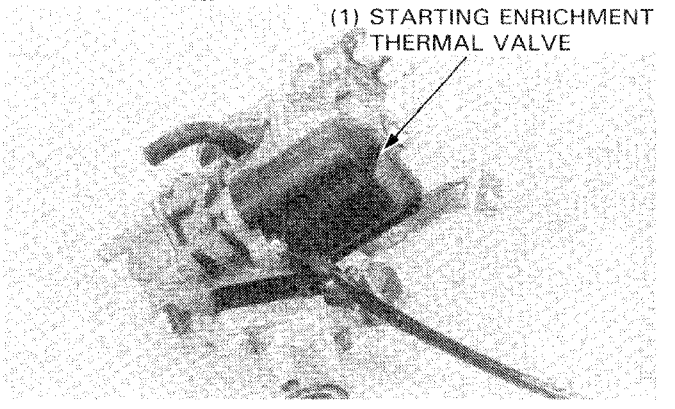

VACUUM CHAMBER

DISASSEMBLY

Loosen the drain screw and drain the fuel from the float chamber.

'86—'88 SHOWN:

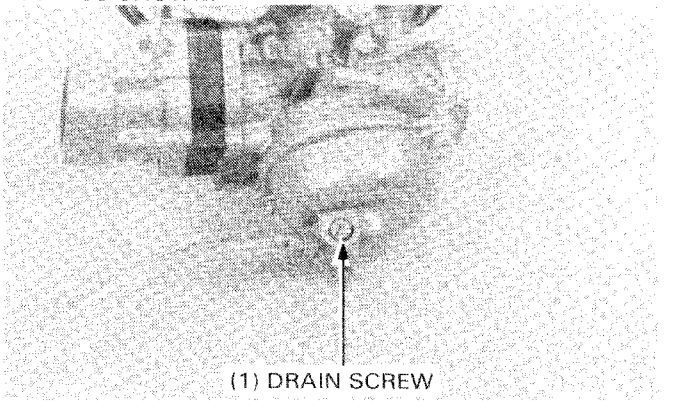

Remove the screws, starting enrichment thermal valve set plate and starting enrichment thermal valve.

NOTE

- Remove the starting enrichment thermal valve before you remove the vacuum chamber cover.

'86—'88 SHOWN:

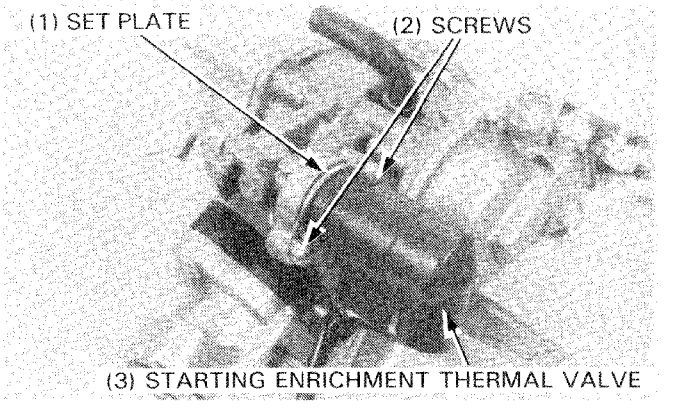

Remove the two screws and vacuum chamber cover.

NOTE

- The vacuum chamber cover is factory pre-set and cannot be disassembled.

'86—'88 SHOWN:

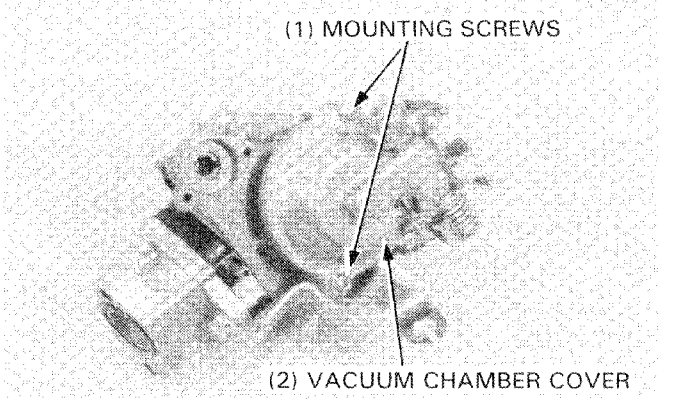

Remove the vacuum piston.

'86—'88:

NOTE

- The primary collar is factory pre-set and cannot be disassembled.
  Do not remove the primary collar.

Hook a wire to the hole in the jet needle set plug and pull it out.

NOTE

- Make sure not to damage the vacuum piston diaphragm.

Remove the jet needle.

'86—'88 SHOWN:

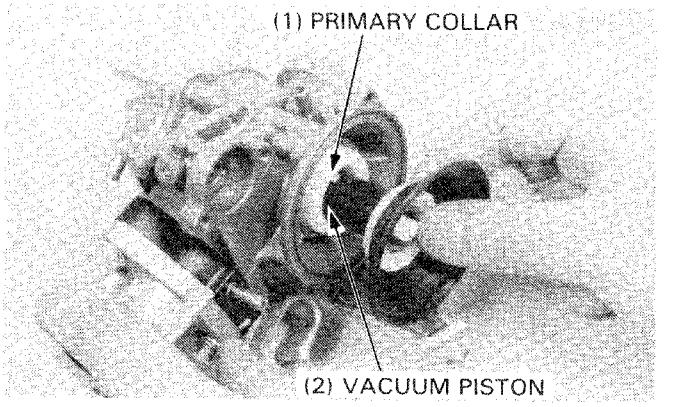

VACUUM PISTON INSPECTION

Check the vacuum piston and jet needle for wear or damage. Check the diaphragm for wear, tears, or deterioration.

'86—'88:

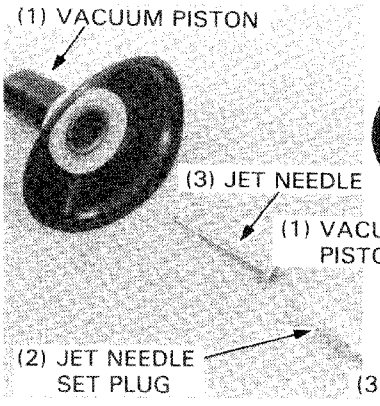

AFTER '88:

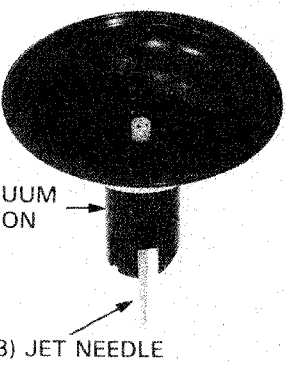

ASSEMBLY

'86—'88:
Install the jet needle in the vacuum piston and push the needle set plug in untill the claw sets in the groove.

'86—'88 AND AFTER '88:
Install the vacuum piston aligning its groove with the throttle stop screw.

'86—'88:

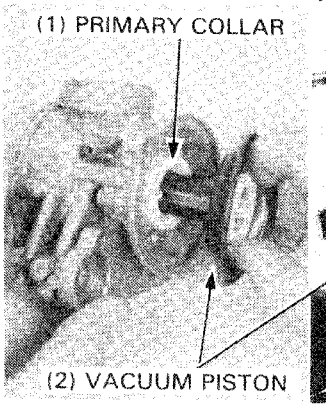

AFTER '88:

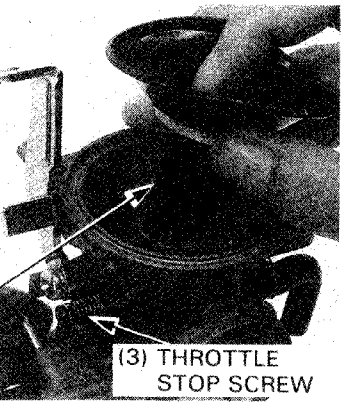

Install the vacuum chamber cover with its link arm end aligned with the jet needle set plug.

NOTE

- Be careful not to let the diaphragm slip out of place when installing the vacuum chamber cover.

Tighten the vacuum chamber cover with two screws.

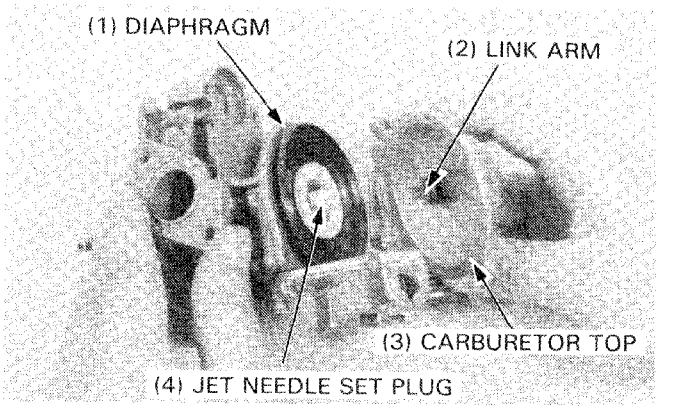

Install the starting enrichment thermal valve, then the set plate with the two screws.
Install the starting enrichment thermal valve cover.

'86—'88 SHOWN:

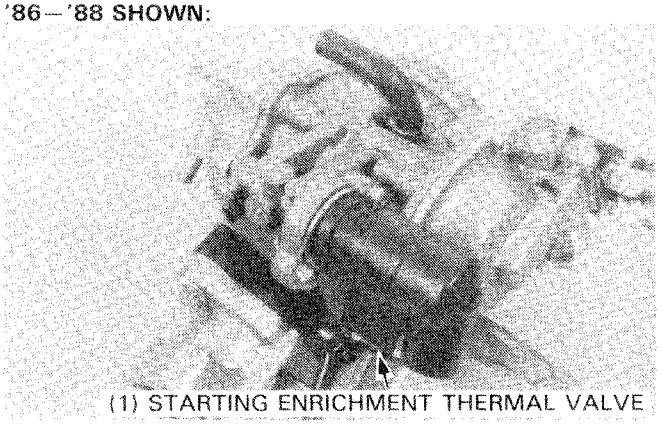

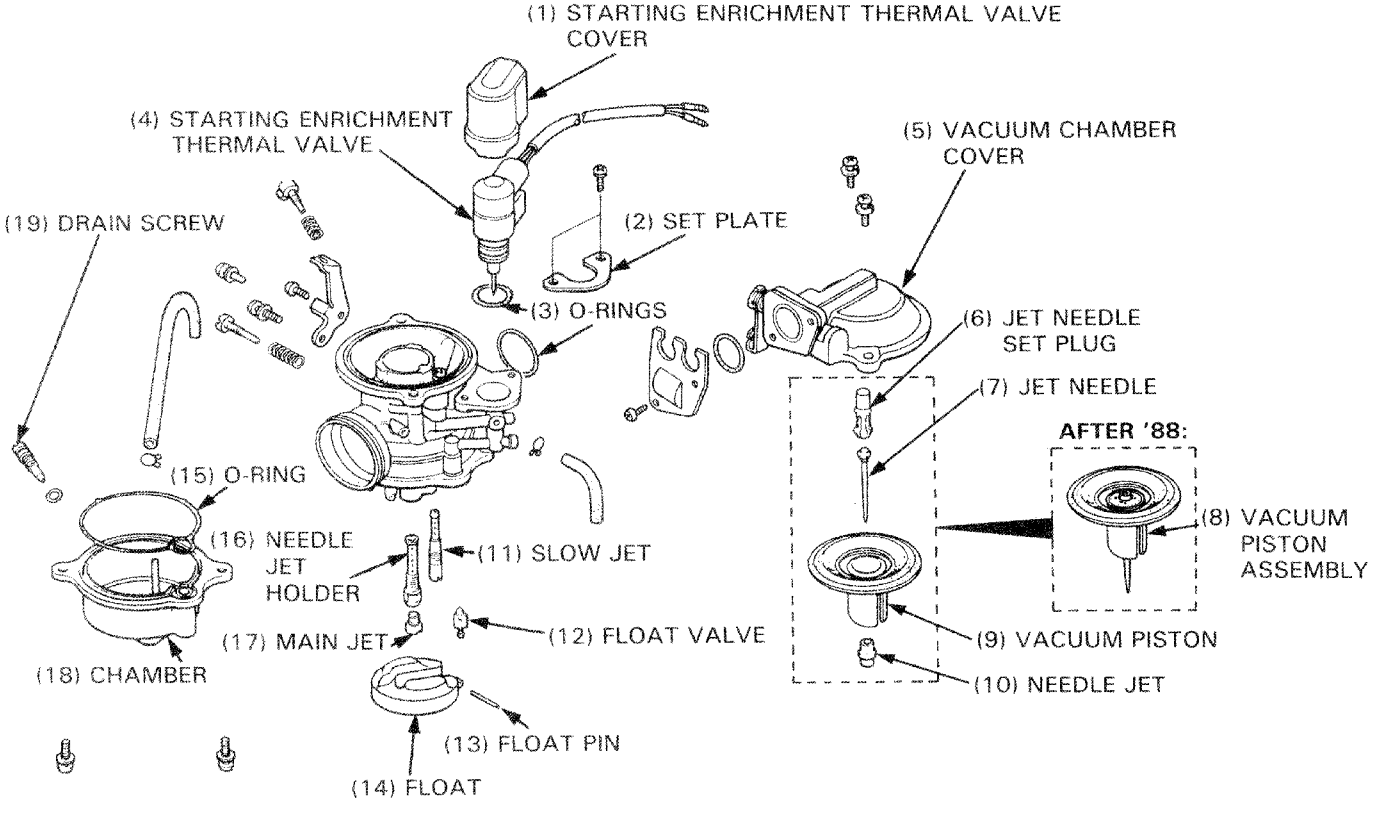

FLOAT CHAMBER

DISASSEMBLY

Remove the two float chamber screws and the float chamber.

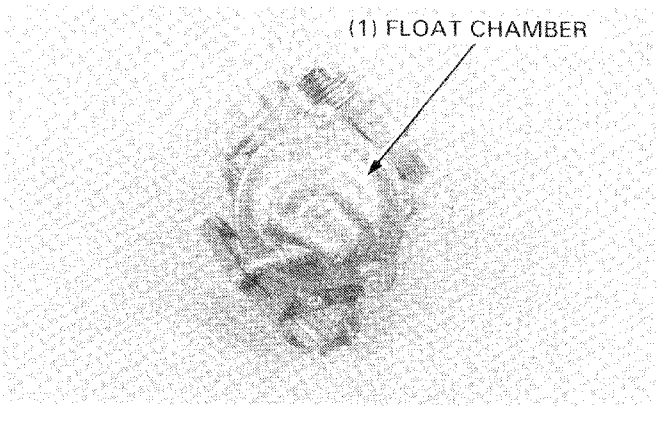

Remove the float pin, float and float valve.

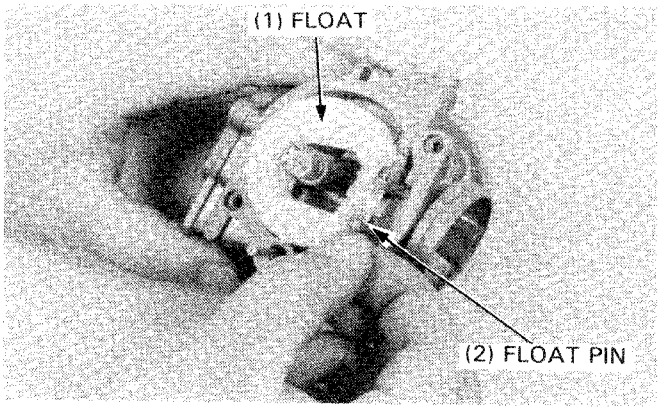

Remove the main jet, needle jet holder and needle jet.
Remove the slow jet.

NOTE

- Before removing the throttle stop screw and air screw, note the number of turns to their fully closed position.
- Do not overtighten the screws to prevent damage to the seat surface.

See page 4-10 for air screw removal.

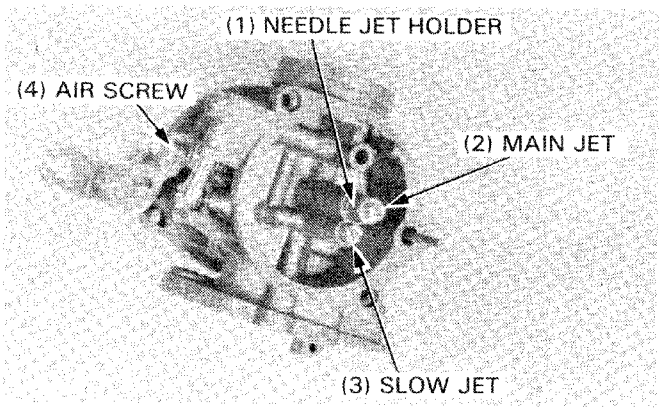

Clean the main jet, needle jet holder, needle jet and slow jet in fresh cleaning solvent.

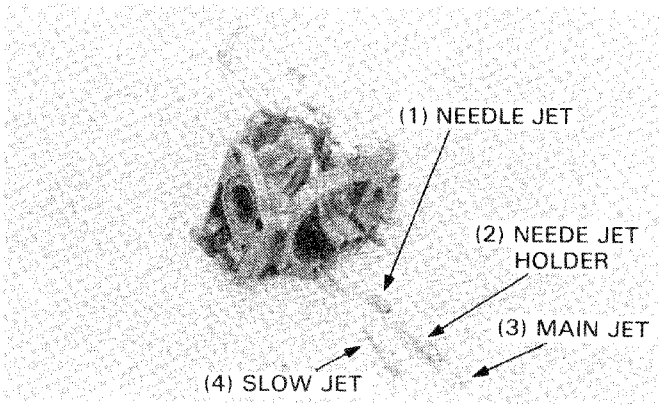

Blow open all passages with compressed air before assembling.

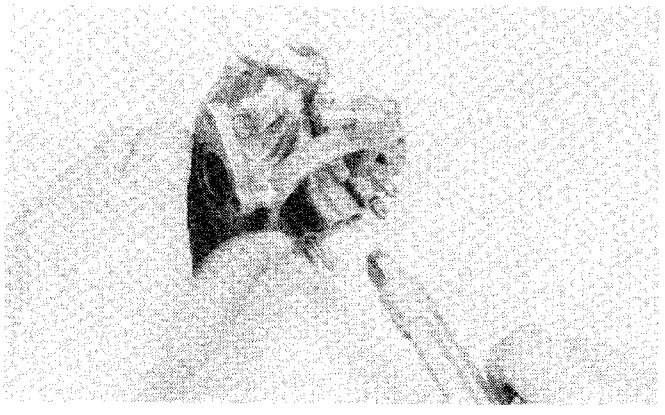

FLOAT/FLOAT VALVE INSPECTION

Check the valve seat surface for wear.
Check that there is no gasoline in the float and no float deformation.

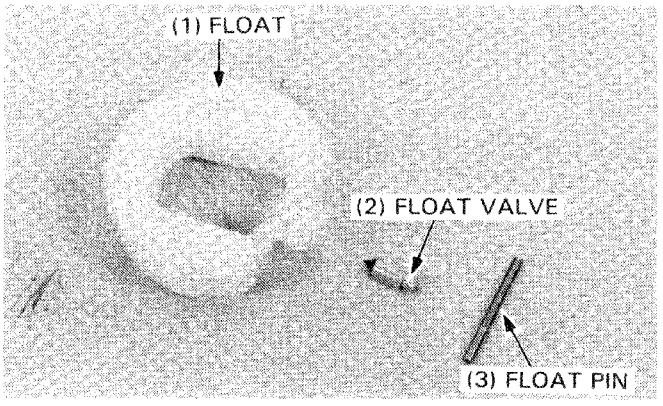

FLOAT CHAMBER ASSEMBLY

Install the following.
—needle jet and needle jet holder.
—main jet.
—slow jet.

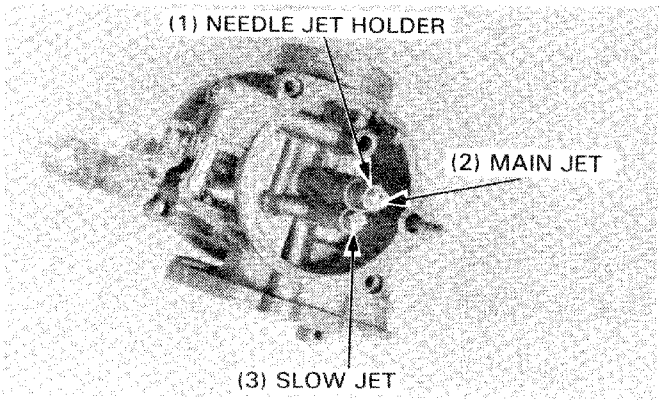

Install the float valve, float and float pin.

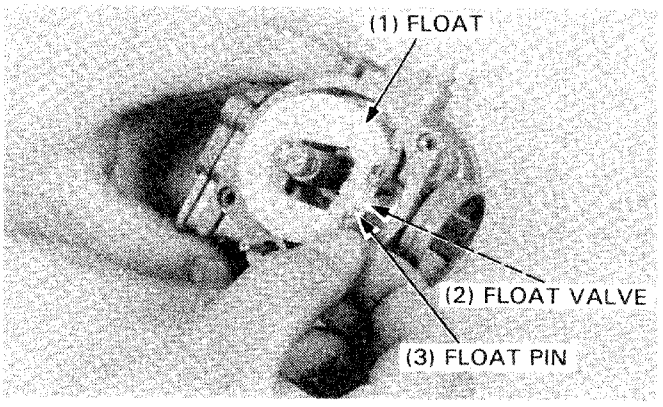

FLOAT LEVEL INSPECTION

Measure the float level with the float tang just contacting the float valve.

FLOAT LEVEL: 10.7 mm (0.42 in)

Replace the float if the level is not within the limit.
Check the float operation and reinstall the float chamber.

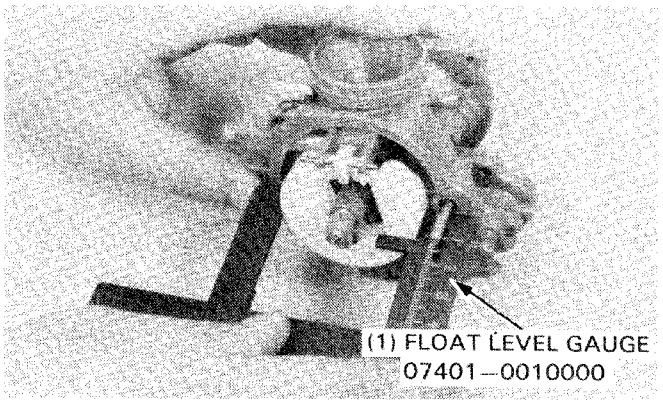

Install a new O-ring in the groove of the float chamber.
Install the float chamber and secure it with the screws.

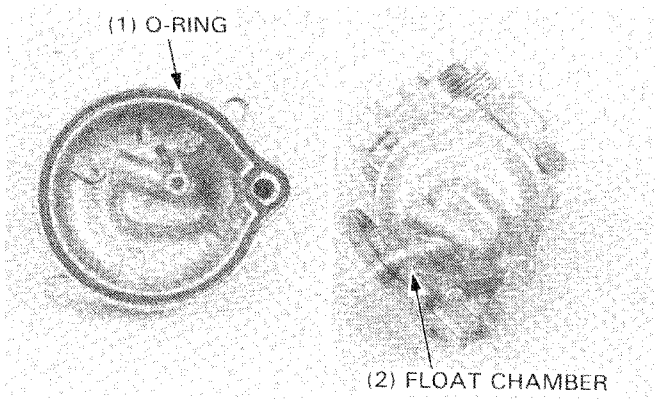

CARBURETOR INSTALLATION

Tighten the drain screw.
Install the intake pipe and tighten the nuts.
Install the carburetor in the carburetor insulator and connecting tube and tighten the band screws. Connect the throttle cable to the carburetor.
Connect the starting enrichment thermal valve wire connectors to the wire harness.
Connect the fuel line to the carburetor.
Perform the following inspections and adjustments.
- Harness and cable routing (page 1-8).
- Throttle operation (page 3-4).
- Carburetor idle speed (page 3-7).
- Fuel leaks.

Install the center cover and right and left side covers (Section 12).

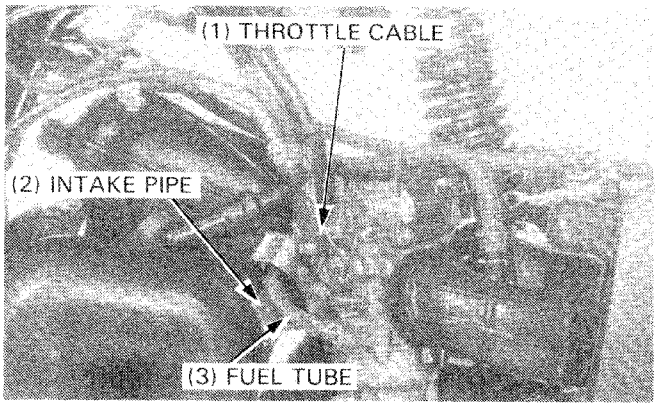

AIR SCREW

REMOVAL

NOTE

- The air screw is factory preset and should not be removed unless the carburetor is overhauled.
- The air screw must be replaced with a new one whenever it is removed.

Using pliers, break off the air screw limiter cap and then remove the remainder of the air screw.
Install a new air screw and then adjust it as described below.

NOTE

- Do not install a limiter cap on a new air screw before adjustment has been made (see below).

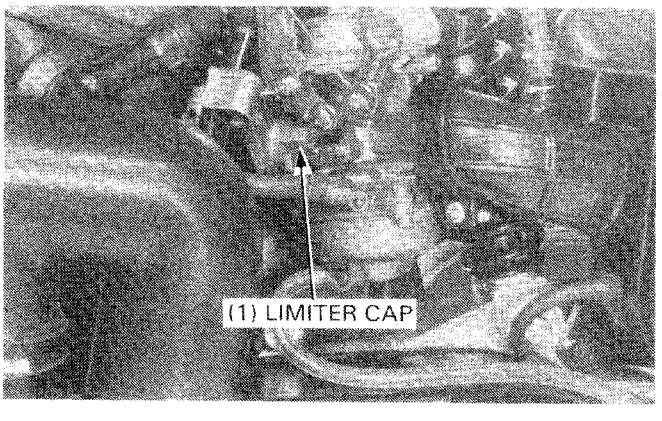

ADJUSTMENT

NOTE

- The air screw is factory preset and no adjustment is necessary unless the air screw is replaced (see removal above).
- Use a tachometer with graduations of 100 rpm or smaller that will accurately indicate a 100 rpm change.

1. Turn the new air screw clockwise until it seats lightly and back it out to the specification given.
   This is an initial setting prior to the final air screw adjustment.

   INITIAL OPENING: '85: 1-7/8 turns out
   After '85: 1-1/2 turns out

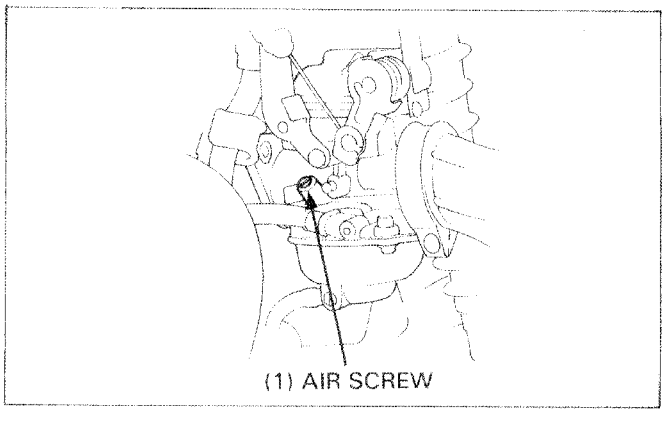

2. Warm up the engine to operating temperature. Stop and go riding for 10 minutes is sufficient.
3. Attach a tachometer.
4. Adjust the idle speed with the throttle stop screw.
   IDLE SPEED: 1,700 ± 100 rpm
5. Turn the air screw in or out slowly to obtain the highest engine speed.
6. Readjust the idle speed with the throttle stop screw.
7. Turn the air screw in gradually until the engine speed drops 100 rpm.
8. Turn the air screw 1 turn out from the position obtained in step 7.
9. Readjust the idle speed with the throttle stop screw.
10. Install the limiter cap onto the air screw with the limiter cap lug touching the carburetor body so that the screw can only turn clockwise. Be careful not to turn the air screw when installing the limiter cap.

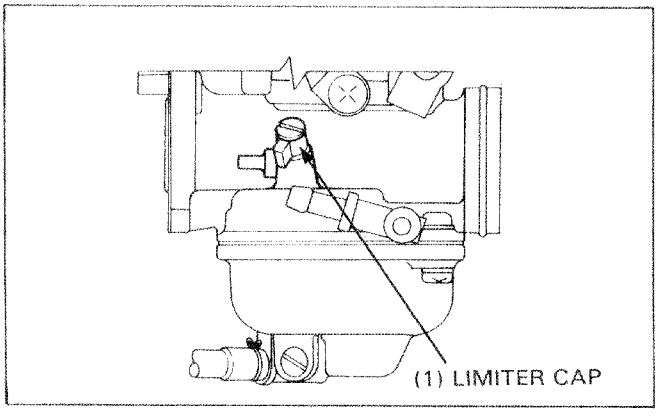

HIGH ALTITUDE ADJUSTMENT

When the scooter is to be operated continuously above 2,000 m (6,500 feet), the carburetor main jet must be replaced with a high altitude type main jet to improve driveability and decrease exhaust emissions.
Remove the carburetor (page 4-3).

WARNING

- *Do not smoke or allow flames or sparks in the work area or where gasoline is stored.*

Drain the fuel from the float chamber.
Remove the float chamber.
Replace the standard #88 main jet with the high altitude #85 main jet.
Reinstall the float chamber and install the carburetor.
Turn the air screw counterclockwise to the specifications below.

'85: 1/2-turn
After '85: 3/8-turn

Attach a Vehicle Emission Control Information Update Label to the right side of the fuel tank as shown.
Refer to Service Bulletin No. SL 132 for information on obtaining the label.

NOTE

- Do not attach the label to any part that can be easily removed from the vehicle.

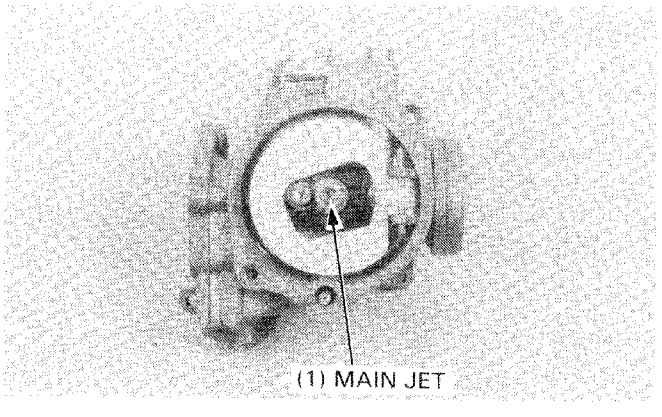

WARNING

- *Continuous operation at an altitude lower than 1,500 m (5,000 feet) with the carburetor adjusted for high altitudes may cause the scooter to idle roughly and stall and could cause engine damage from overheating.*

When the scooter is to be operated continuously below 1,500 m (5,000 feet), remove the carburetor and replace the high altitude main jet with the standard #88 main jet.
Turn the air screw clockwise to the specifications below.

'85: 1/2-turn
After '85: 3/8-turn

Be sure to make these adjustments at low altitude at normal operating temperature.
Remove the Vehicle Emission Control Update Label that is attached to the right side of the fuel tank.

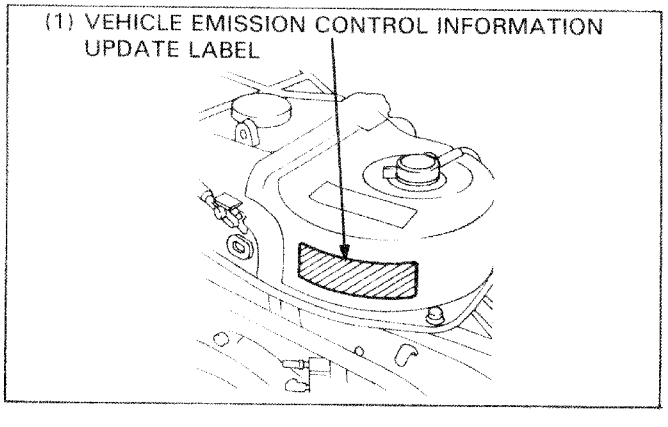

AUTOMATIC FUEL VALVE

INSPECTION

WARNING

- *Do not allow flames or sparks near gasoline. Wipe up spilled gasoline at once.*

Remove the left rear cover and turn the manual valve to ON.
Stop the engine and place a container under the fuel line.
Remove the fuel tube from the carburetor.
Inspect the fuel tube for fuel flowing out.
Drain the remaining fuel in the fuel valve and fuel tube (approx. 5-10 cc).
If the fuel flow stops, the automatic fuel valve is operating normally. If the fuel flow does not stop, clean the vacuum tube.

Disconnect the vacuum tube from the intake port and apply vacuum with a vacuum pump.
The valve is operating normally if fuel flows out of the tube when vacuum is applied and fuel stops flowing out when the vacuum pump is disconnected.

If the valve does not operate normally:
- Inspect for clogging and clean if required.
- Blow low pressure air through the valve from the inlet side to check if the flat diaphragm is in its normal position.
- If air flows through, replace the valve.

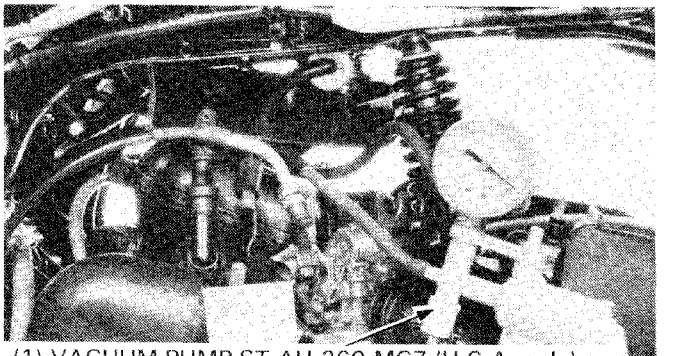
(1) VACUUM PUMP ST-AH-260-MC7 (U.S.A. only) or VACUUM/PRESSURE PUMP A 937X-041-XXXXX

FUEL TANK

FUEL UNIT REMOVAL

Remove the left side cover and lift the seat up.
Disconnect the fuel unit wire connectors.
Turn the fuel unit retainer counterclockwise to remove the fuel unit. Remove the fuel unit.

CAUTION

- *Do not bend the fuel unit arm.*

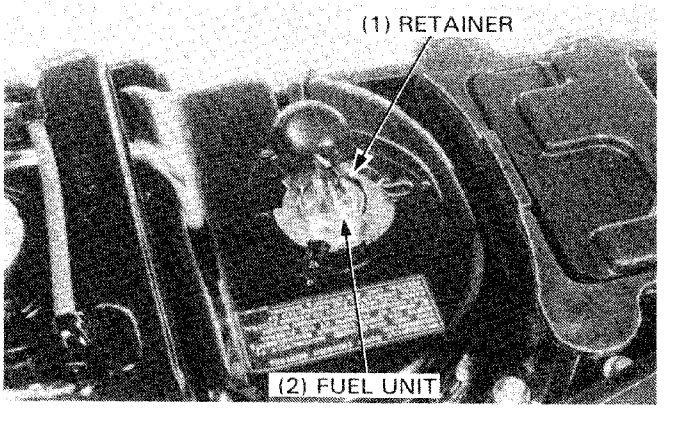

FUEL UNIT INSTALLATION

Set the fuel unit gasket onto the fuel tank.
Install by aligning the groove of the fuel unit base with the tab of the fuel tank.
Install the fuel unit retainer by turning it clockwise.
Make sure that the arrows are aligned.

Reset the terminal cover properly and reinstall the left rear cover.

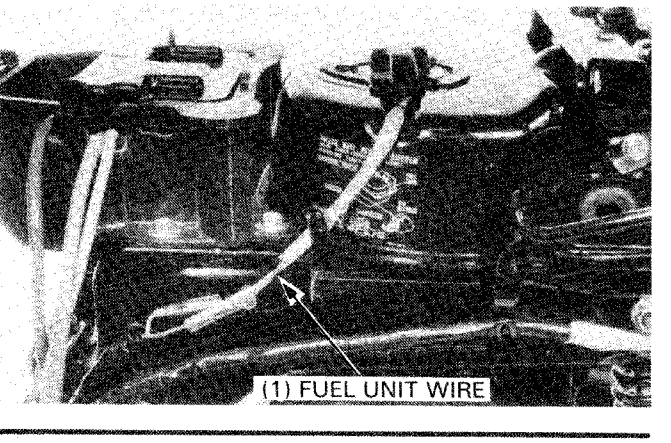

REMOVAL

Remove the right and left side covers.
Remove the battery.
Remove the seat and battery box.

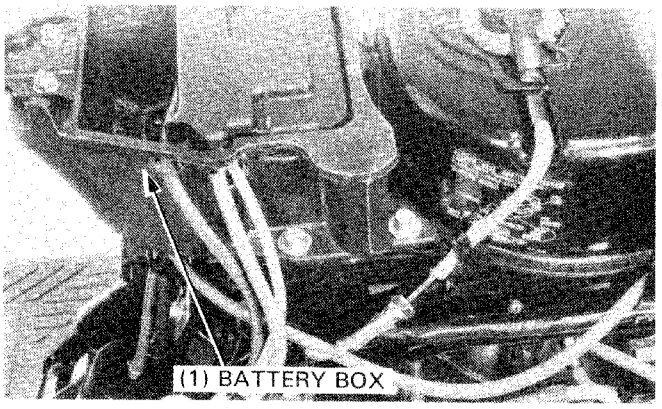

Remove the fuel tank under cover.
Disconnect the fuel unit wire connector.

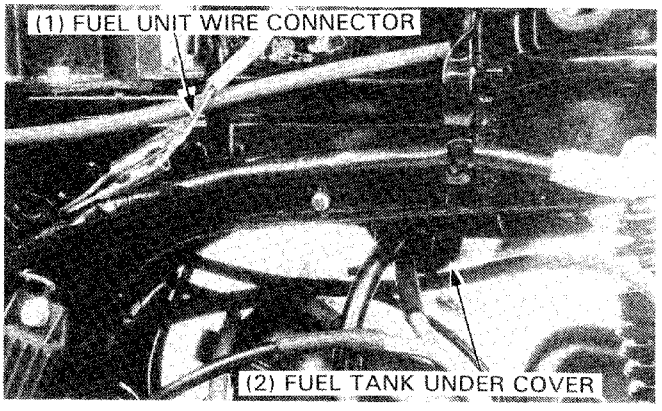

Remove the seat bridge by removing the bolts.
Lift the fuel tank up by removing the two tank attaching bolts.

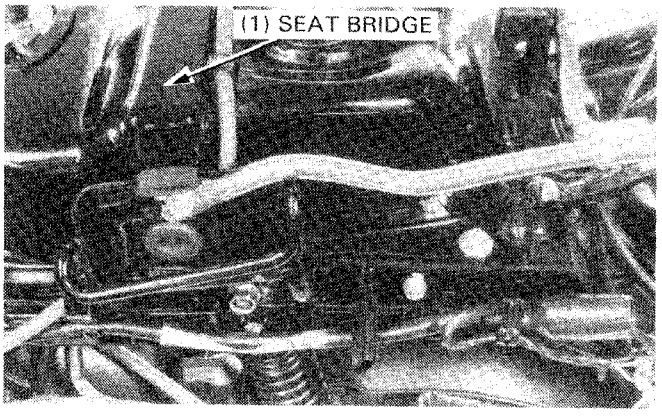

Disconnect the vacuum tube and fuel tube from the fuel valve and remove the tank.

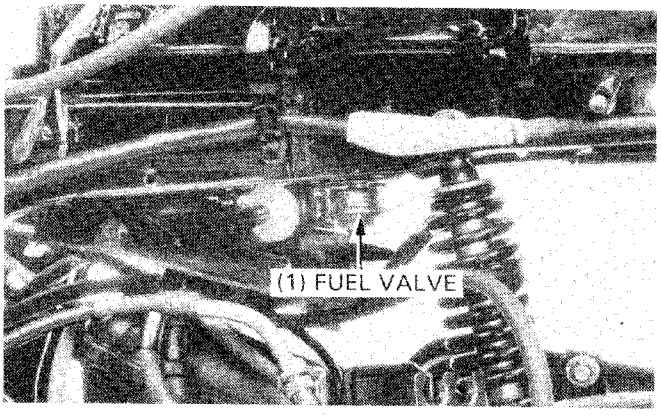

INSTALLATION

Install the fuel tank in the reverse order of removal.

NOTE

- Install the fuel unit while aligning with projection of the fuel tank.

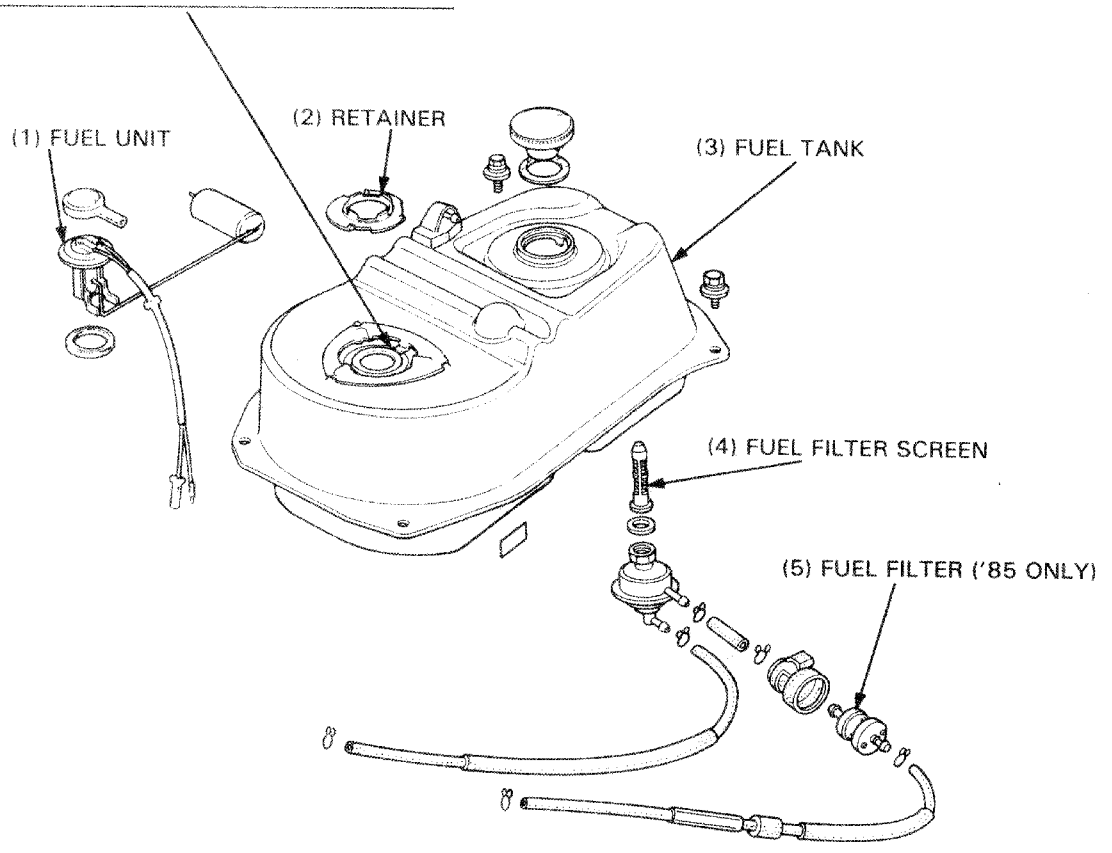

AIR CLEANER HOUSING

Remove the left side cover.
Disconnect the breather tube from the connecting tube band.
Loosen the connecting tube band.

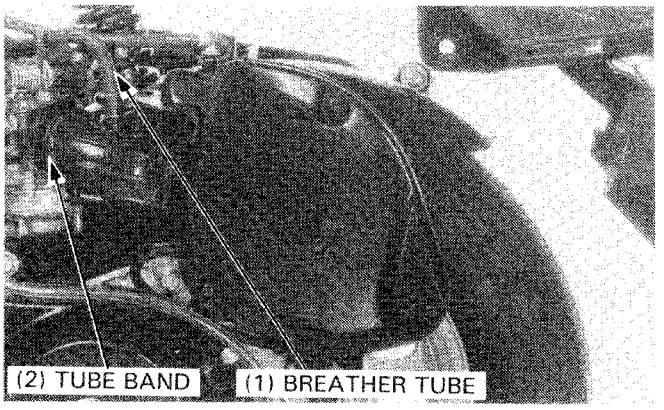

Remove the mounting bolts and air cleaner housing.

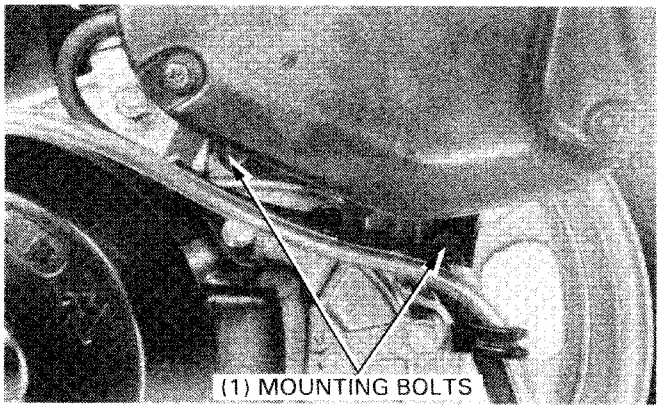

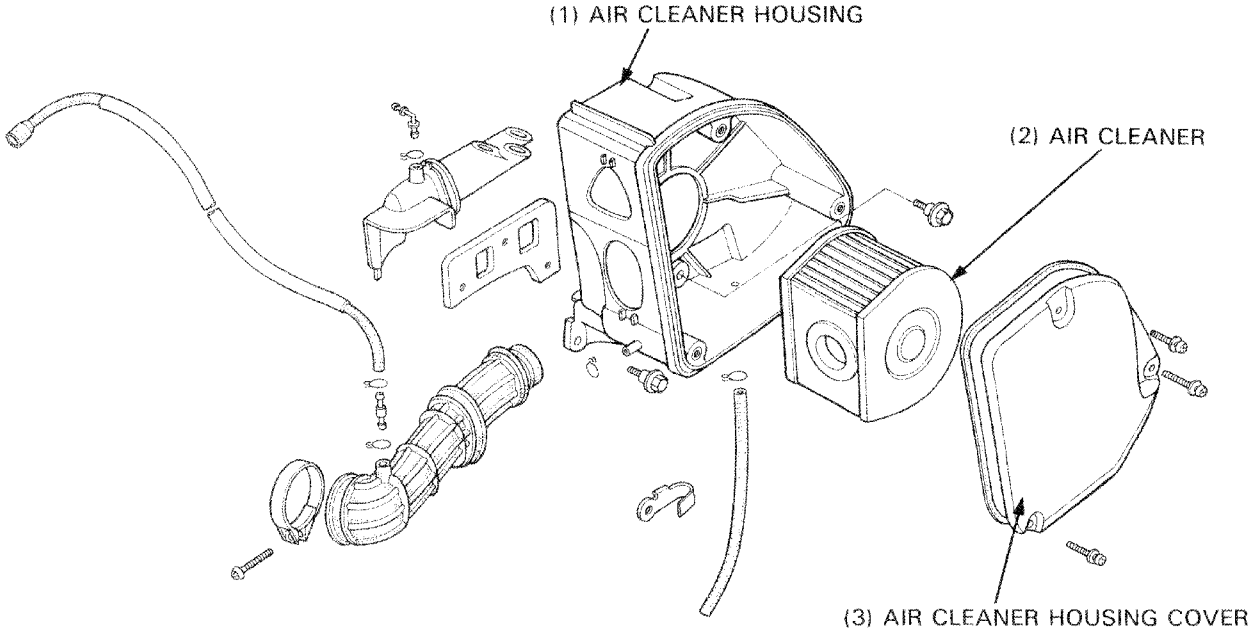

CRANKCASE BREATHER

Route the breather tubes as shown.
See page 3-4 for crankcase breather service.

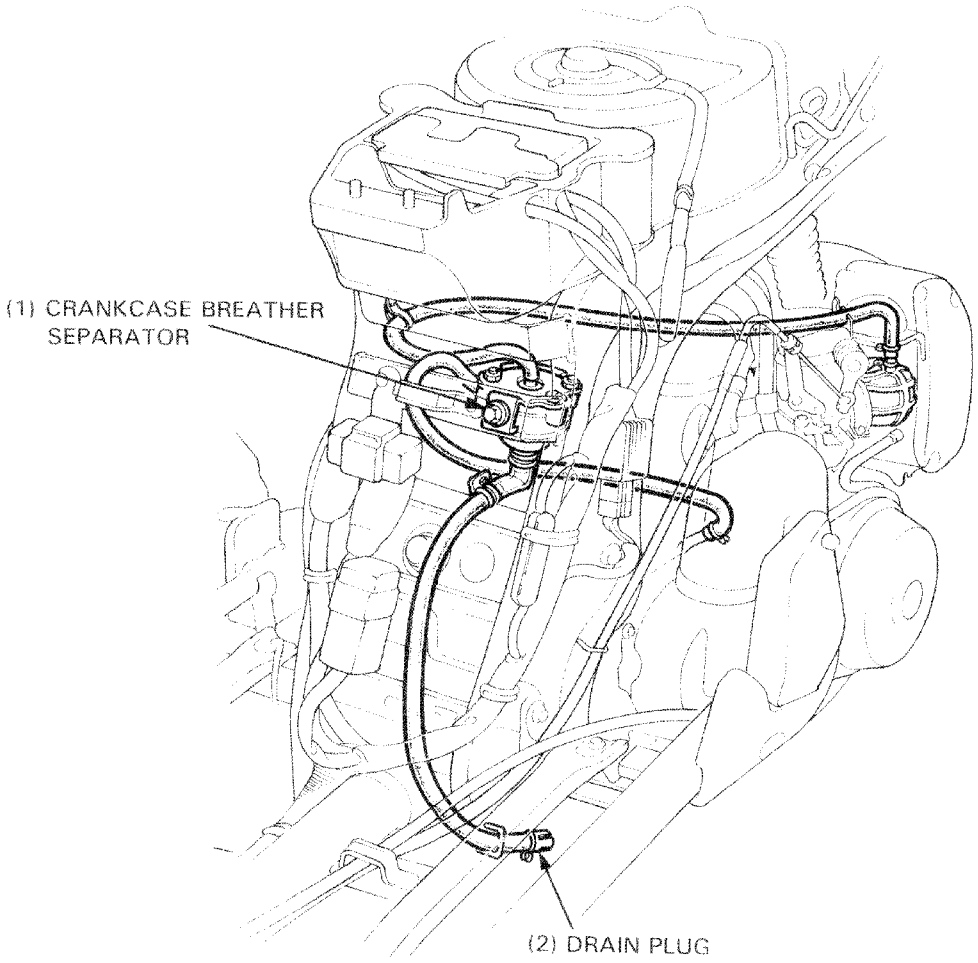

CRANKCASE BREATHER SEPARATOR REMOVAL

Remove the right and left side covers.
Disconnect the breather tubes from the crankcase breather separator.
Remove the separator mounting screws and separator.
Pull out the separator chamber from the oil pipe.
Disassemble the separator and clean the filter.
Reassemble and install in the reverse order of removal.

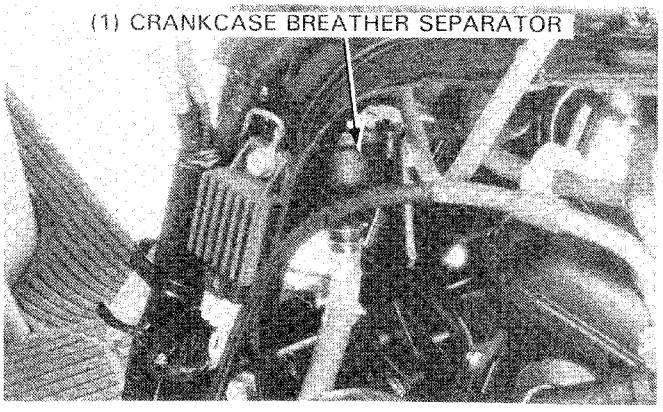

EVAPORATIVE EMISSION CONTROL SYSTEM (California model only)

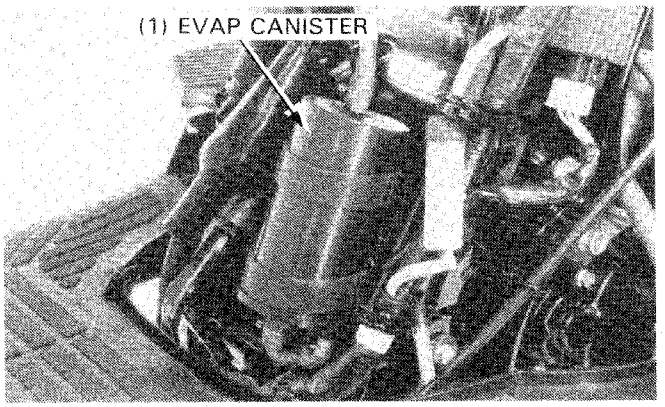

EVAP CANISTER REMOVAL

Remove the left and right side covers.
Disconnect the tubes from the canister.
Pull out the EVAP canister from the canister bracket.
Remove the bolts and canister bracket.

EVAP CANISTER INSTALLATION

Install in the reverse order of removal.

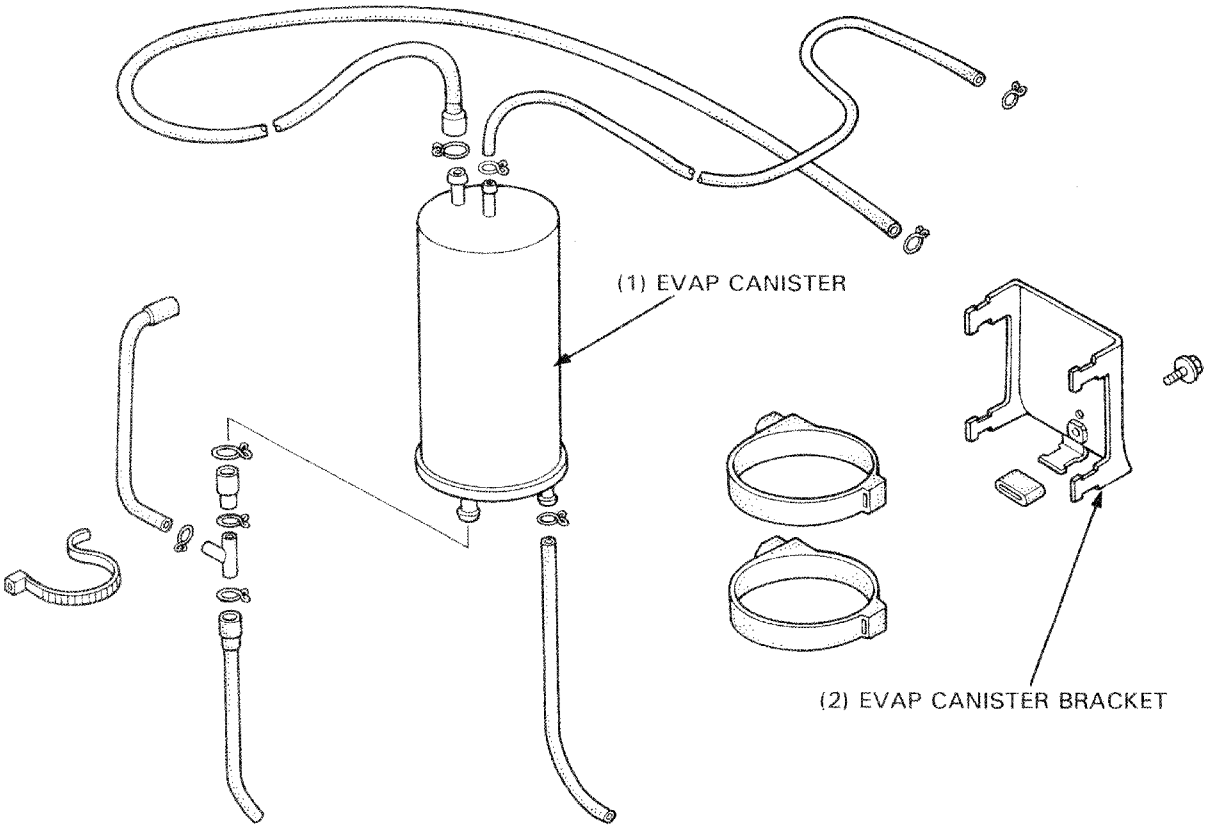

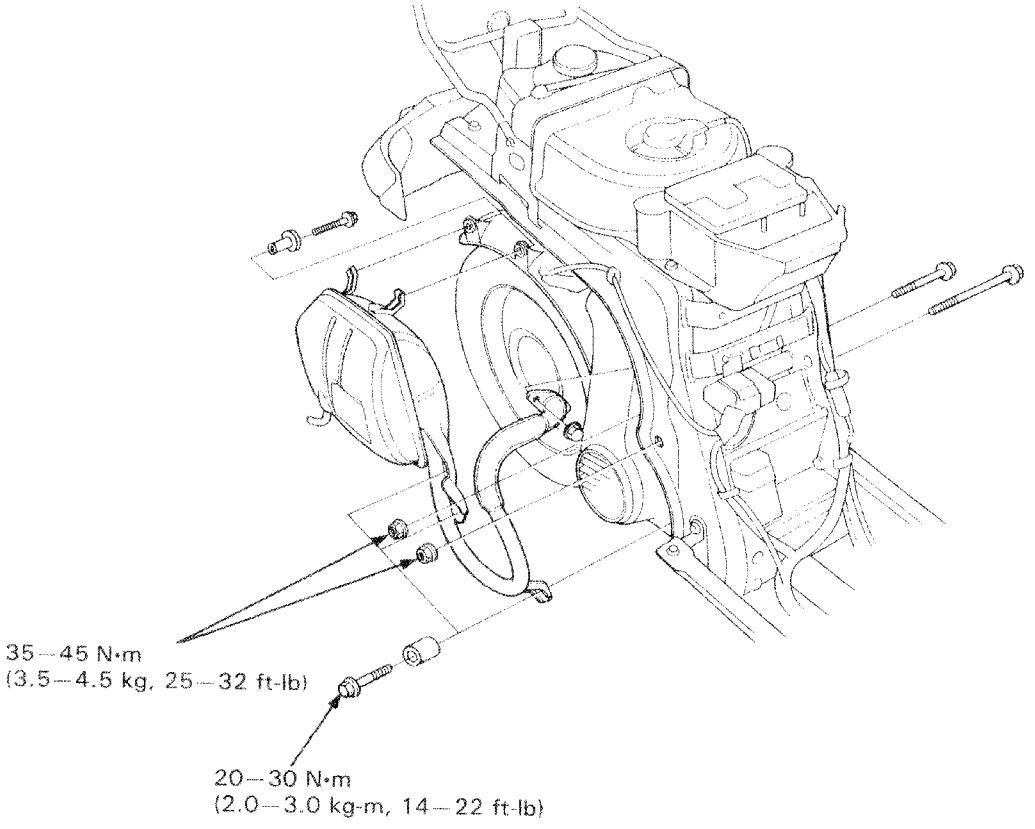
35—45 N·m
(3.5—4.5 kg, 25—32 ft-lb)
20—30 N·m
(2.0—3.0 kg-m, 14—22 ft-lb)

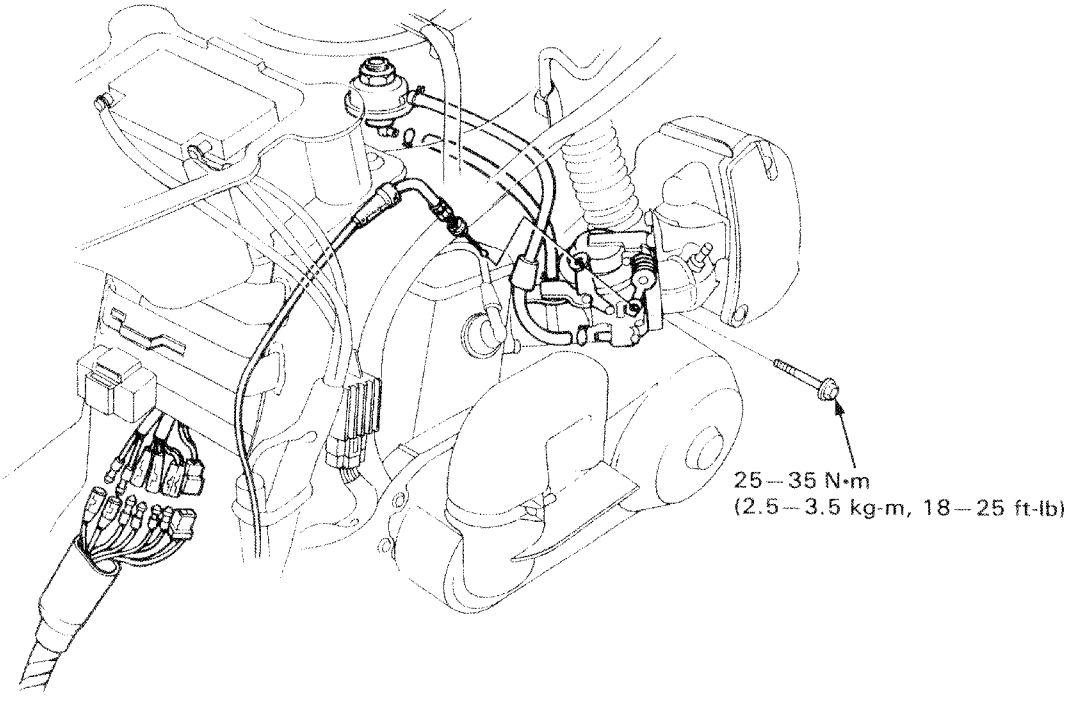
25—35 N·m
(2.5—3.5 kg-m, 18—25 ft-lb)

5. ENGINE REMOVAL/INSTALLATION

SERVICE INFORMATION	5-1	ENGINE INSTALLATION	5-4
ENGINE REMOVAL	5-2		

SERVICE INFORMATION

GENERAL

- A floor jack or other adjustable support is required to support and maneuver the engine.
- The following parts or components should be serviced with the engine removed.
- Oil pump (Section 2)
- Cam chain tensioner (Section 11)
- Crankcase, crankshaft (Section 11)

5

SPECIFICATIONS

Engine dry weight	17.5 kg (38.6 lb)
Engine oil capacity	750 cc (25 U.S. oz, 0.66 Imp. qt.) after disassembly 600 cc (20 U.S. oz, 0.53 Imp qt.) after draining

TORQUE VALUES

Engine hanger bolt		35—45 N•m (3.5—4.5 kg-m, 25—32 ft-lb)
Engine mounting bolt		35—45 N•m (3.5—4.5 kg-m, 25—32 ft-lb)
Rear cushion lower mounting bolt		25—35 N•m (2.5—3.5 kg-m, 18—25 ft-lb)
Rear axle nut	'85, '86:	80—100 N•m (8.0—10.0 kg-m, 58—72 ft-lb)
	After '86:	100—120 N•m (10.0—12.0 kg-m, 72—87 ft-lb)
Exhaust pipe joint nut		5—12 N•m (0.5—1.2 kg-m, 4—9 ft-lb)
Muffler stay flange bolt	'85, '86:	20—30 N•m (2.0—3.0 kg-m, 14—22 ft-lb)
	After '86:	30—36 N•m (3.0—3.6 kg-m, 22—26 ft-lb)

ENGINE REMOVAL

Place the scooter on its center stand.
Disconnect the battery negative cable at the battery.
Drain the engine and transmission oils (Section 2).

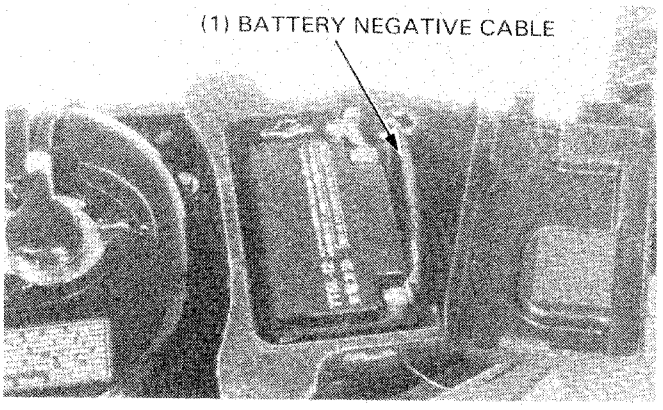

Remove the side cover guard (page 12-2).
Remove the right and left side covers (page 12-2).

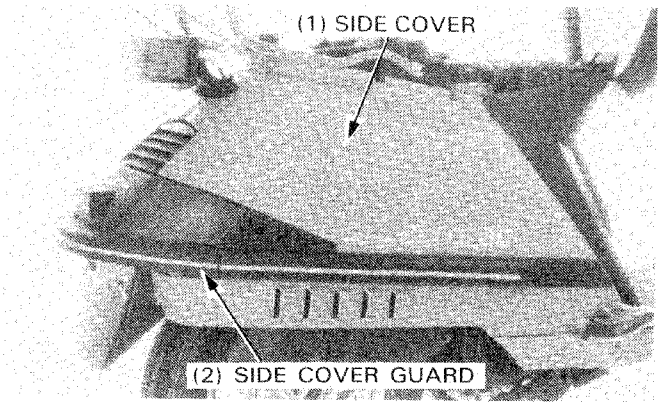

Disconnect the alternator wires, starting enrichment thermal valve wire and starter motor wire.

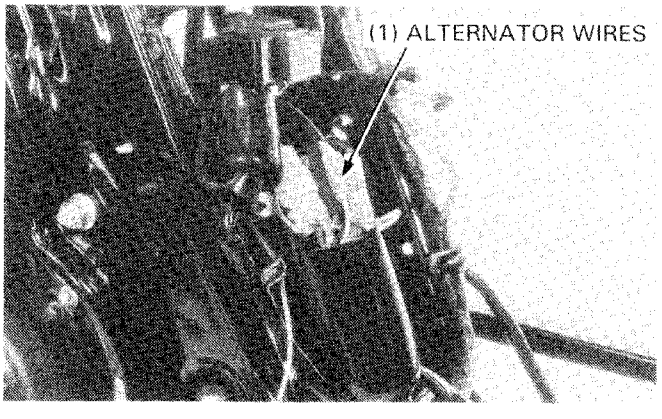

Remove the rear brake adjusting nut.
Remove the rear brake clamp bolt and clamp.

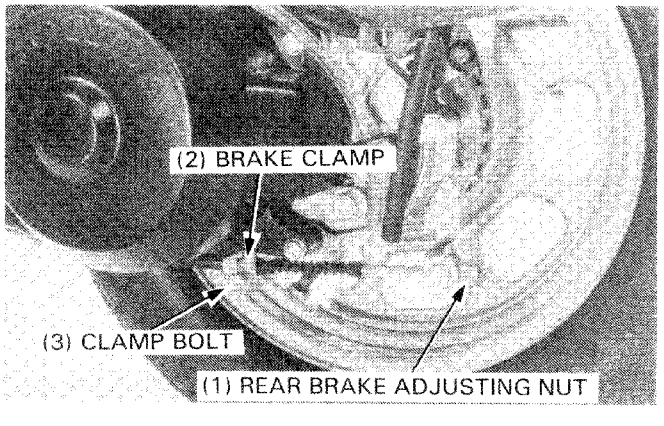

Disconnect the fuel and vacuum lines.
Disconnect the throttle cable.

WARNING

- *Gasoline is extremely flammable and is explosive under certain conditions.*
  Work in a well ventilated area. Do not smoke or allow flames or sparks in the work area.

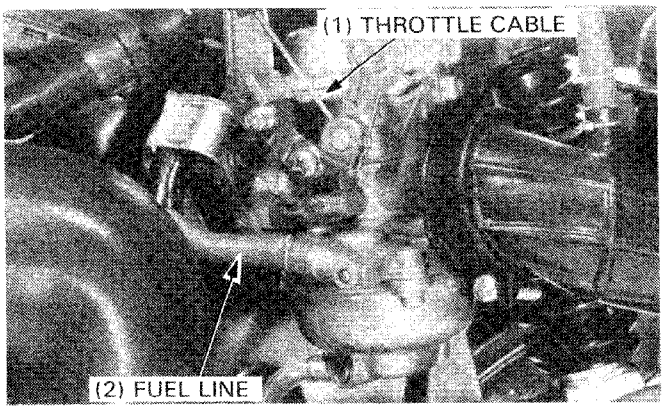

Remove the muffler.
Remove the spark plug cap.

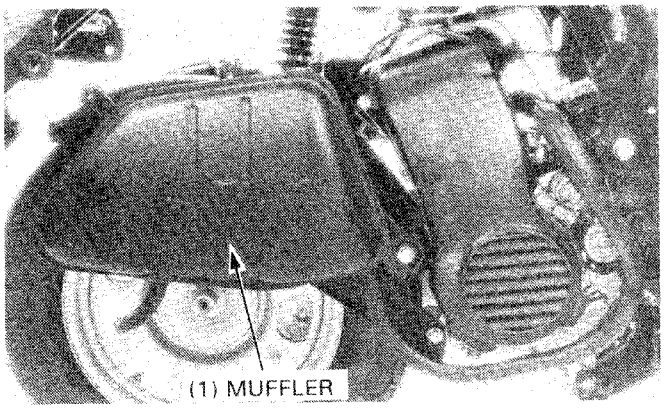

Place a jack or other support under the engine.
Remove the rear shock lower mounting bolt.

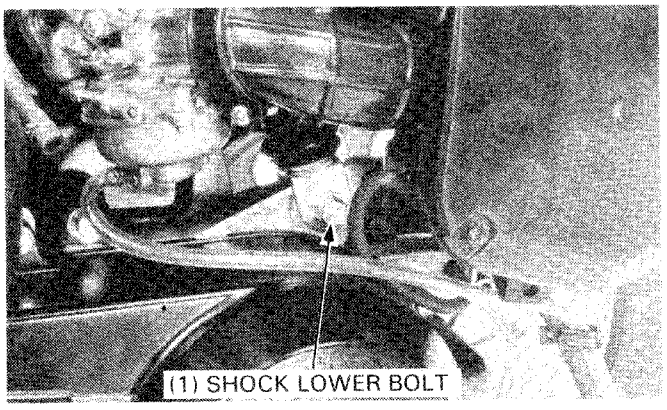

Remove the engine mounting bolt and nut.
Remove the engine.

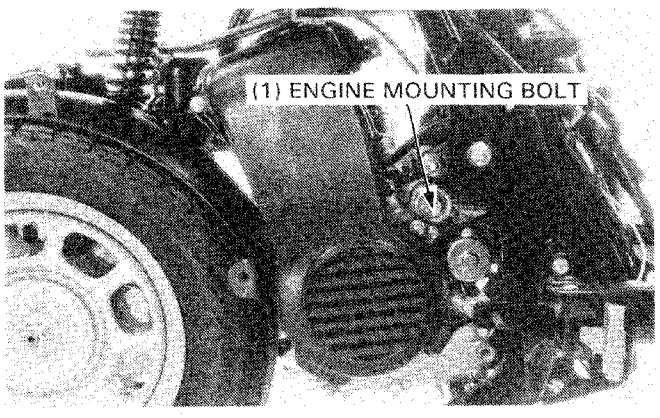

Remove the carburetor (page 4-3) and air cleaner housing (page 4-15).
Remove the rear fender.

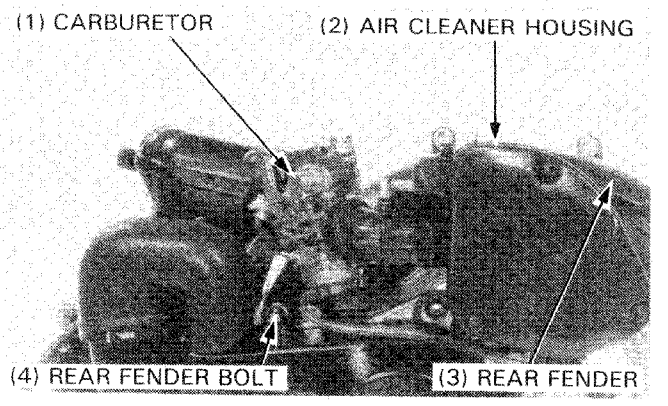

Remove the stopper rubber by removing the bolt.
Remove the bolt and engine hanger.

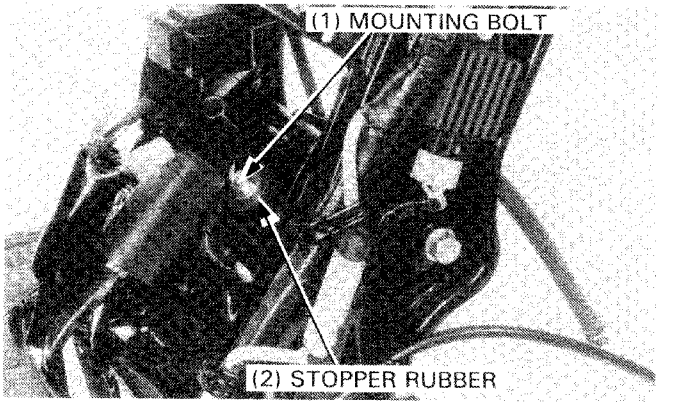

ENGINE INSTALLATION

Install the removed parts in the reverse order of removal, noting the following:

- Be careful not to damage individual parts of frame and engine.
- Route harnesses and wires properly.
- Check and adjust the following after installation.

— throttle cable free play (page 3-4).
— rear brake (page 3-8).

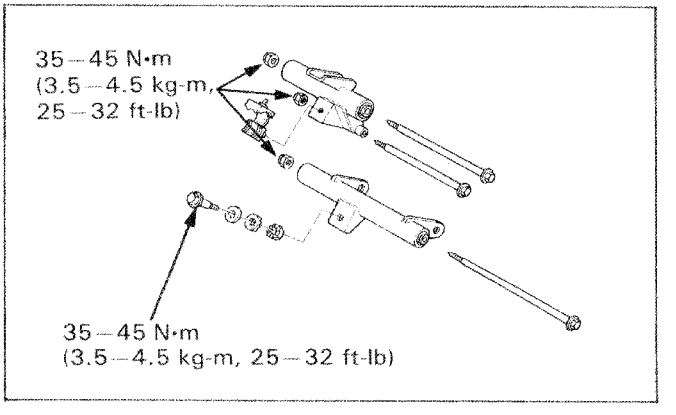

TORQUE VALUES:

Engine hanger bolt:
35—45 N·m (3.5—4.5 kg-m, 25—32 ft-lb)
Engine mounting bolt:
35—45 N·m (3.5—4.5 kg-m, 25—32 ft-lb)
Rear shock absober lower mounting bolt:
25—35 N·m (2.5—3.5 kg-m, 18—25 ft-lb)
Rear axle nut:
'85, '86:
80—100 N·m (8.0—10.0 kg-m, 58—72 ft-lb)
After '86:
100—120 N·m (10.0—12.0 kg-m, 72—87 ft-lb)
Exhaust pipe joint nut:
5—12 N·m (0.5—1.2 kg-m, 4—9 ft-lb)
Muffler stay flange bolt:
'85, '86:
20—30 N·m (2.0—3.0 kg-m, 14—22 ft-lb)
After '86:
30—36 N·m (3.0—3.6 kg-m, 22—26 ft-lb)

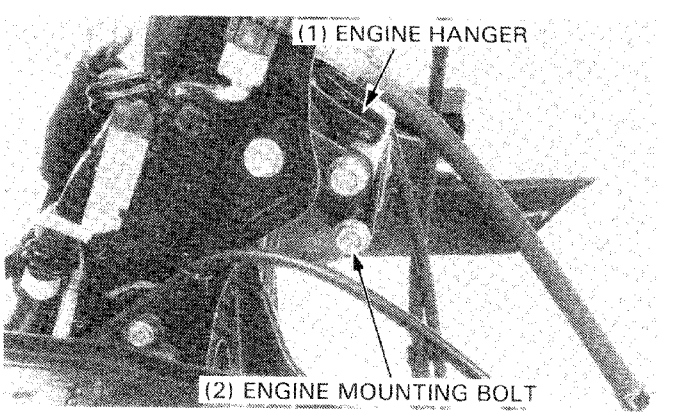

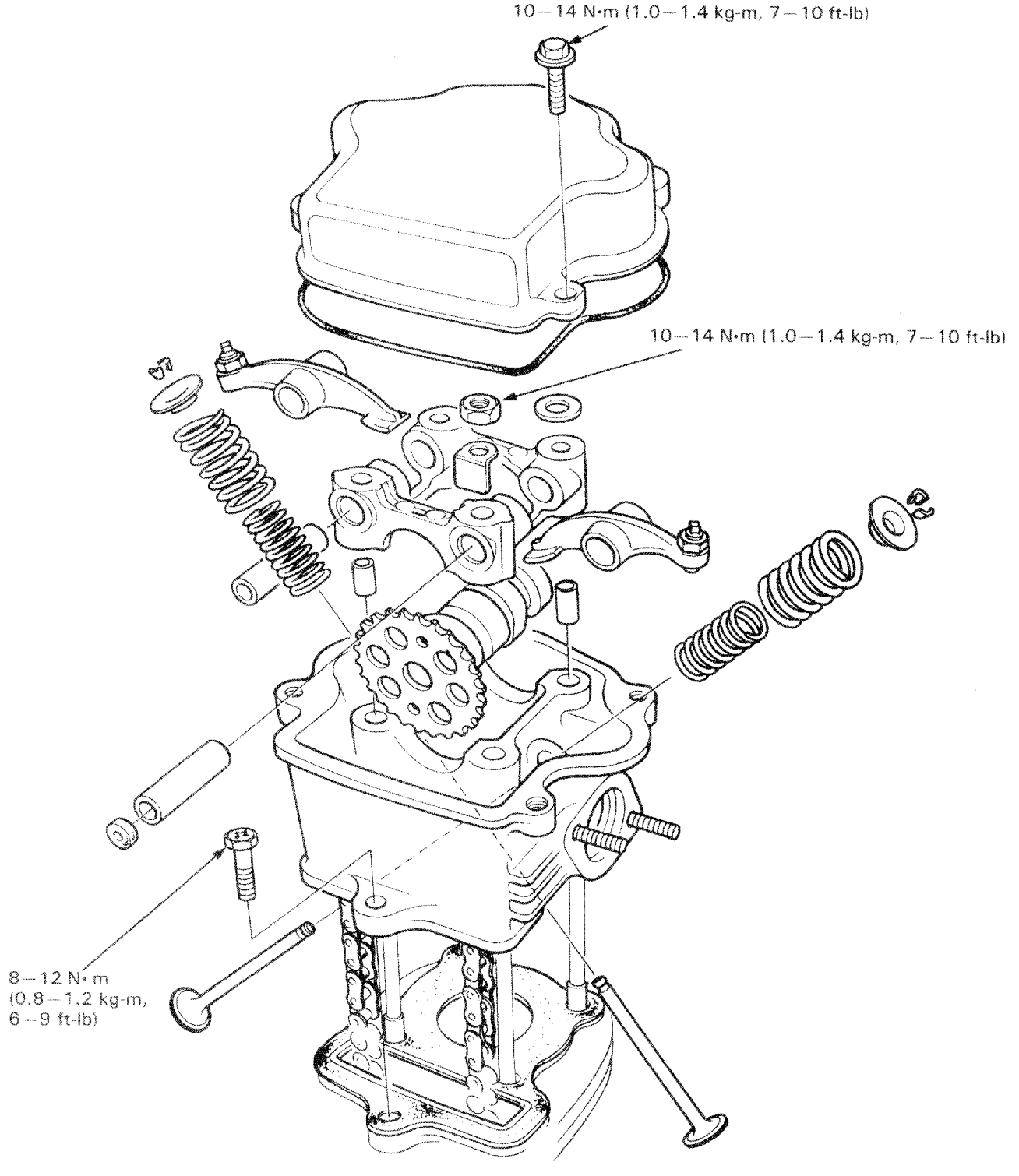
10—14 N·m (1.0—1.4 kg-m, 7—10 ft-lb)
10—14 N·m (1.0—1.4 kg-m, 7—10 ft-lb)
8—12 N·m
(0.8—1.2 kg-m,
6—9 ft-lb)

6. CYLINDER HEAD/VALVES

SERVICE INFORMATION	6-1	VALVE GUIDE REPLACEMENT	6-11
TROUBLESHOOTING	6-2	VALVE SEAT INSPECTION AND REFACING	6-11
CAMSHAFT	6-3	CYLINDER HEAD ASSEMBLY	6-14
CYLINDER HEAD REMOVAL	6-8	CYLINDER COMPRESSION	6-15
CYLINDER HEAD DISASSEMBLY	6-9		

SERVICE INFORMATION

GENERAL

- This section covers maintenance of the cylinder head, valves, camshaft and rocker arms.
- The cylinder head can be serviced with the engine installed in the frame.
- Inspect the oil passages for clogging.
- When assembling cylinder head, coat the camshaft and rocker arms with oil and fill the cylinder head oil pocket with engine oil.
- Camshaft installation/removal can be done with the engine in the frame.
- Cylinder head removal/installation must be done with the engine removed from the frame.
- For cam chain tensioner inspection, see section 11.

SPECIFICATION

ITEM			STANDARD	SERVICE LIMIT
Compression pressure			1,400 kPa (14kg/cm², 199 psi)	——
CYLINDER HEAD	Warpage		——	0.05 mm (0.002 in)
	Valve seat width		1.0 mm (0.04 in)	1.6 mm (0.06 in)
	Valve guide I.D.	IN/EX	5.000–5.012 mm (0.1969–0.1973 in)	5.03 mm (0.198 in)
VALVE	Valve stem O.D.	IN	4.970–4.985 mm (0.1957–0.1963 in)	4.90 mm (0.193 in)
		EX	4.955–4.970 mm (0.1951–0.1957 in)	4.90 mm (0.193 in)
	Valve-to-guide clearance	IN	0.015–0.032 mm (0.0006–0.0013 in)	0.08 mm (0.003 in)
		EX	0.030–0.057 mm (0.0012–0.0022 in)	0.10 mm (0.004 in)
	Valve spring free length (IN, EX)	INNER	30.3 mm (1.19 in)	29.5 mm (1.16 in)
		OUTER	39.0 mm (1.54 in)	29.3 mm (1.15 in)
CAMSHAFT	Cam height	IN	28.481 mm (1.1213 in)	28.0 mm (1.10 in)
		EX	28.303 mm (1.1143 in)	27.8 mm (1.09 in)
ROCKER ARM	Rocker arm I.D.		10.000–10.022 mm (0.3937–0.3946 in)	10.10 mm (0.398 in)
	Rocker arm shaft O.D.		9.978–9.987 mm (0.3928–0.3932 in)	9.91 mm (0.390 in)

TORQUE VALUES

Cylinder head cover bolt	10–14 N·m (1.0–1.4 kg-m, 7–10 ftOlb)
Camshaft holder	10–14 N·m (1.0–1.4 kg-m, 7–10 ft-lb)
Cylinder head bolt	8–12 N·m (0.8–1.2 kg-m, 6–9 ft-lb)
Cam chain tensioner sealing bolt	38–45 N·m (3.8–4.5 kg-m, 27–33 ft-lb)

TOOLS

Special

Valve guide reamer	07984–MA60000 or 07984–MA6000A (U.S.A. only)
Valve guide driver/remover, 5 mm	07942–MA60000
Valve spring compressor attachment	07957–8340100

Common

Valve spring compressor	07757–0010000

TROUBLESHOOTING

Engine top-end problems, which affect engine performance, can be diagnosed by a compression test, or by tracing noises with a sounding rod or stethoscope.

Low compression

- Valves
  - Incorrect valve adjustment
  - Burned or bent valves
  - Incorrect valve timing
  - Broken valve spring

Cylinder head

- Leaking or damaged head gasket
- Warped or cracked cylinder head

- Cylinder and piston (Refer to Section 7)

Compression too high

- Excessive carbon built-up on piston or combustion chamber

Excessive noise

- Incorrect valve adjustment
- Sticking valve or broken valve spring
- Damaged or worn camshaft
- Loose or damaged cam chain tensioner
- Worn or damaged cam chain tensioner
- Worn cam sprocket teeth
- Worn rocker arm and/or shaft

CAMSHAFT

REMOVAL

Remove the right and left side covers (page 12-2).
Remove the fan cover.

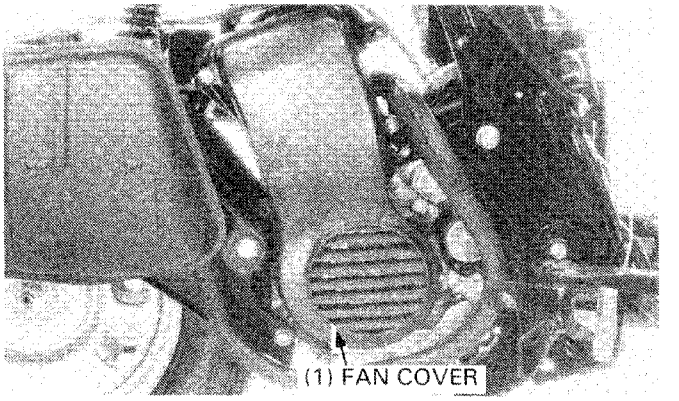

Remove the sealing bolt and then remove the tensioner spring and tensioner push rod.

NOTE

- A small amount of oil flows out when the tensioner bolt is removed.

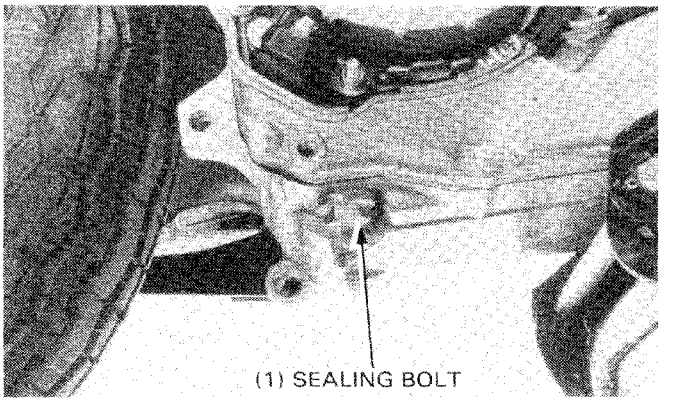

Remove the top shroud.

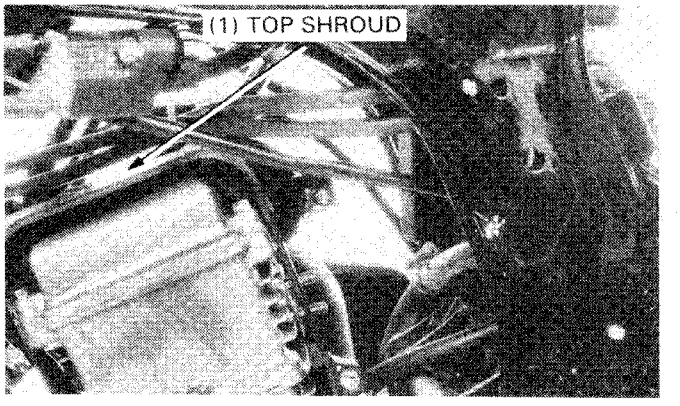

Remove the cylinder head cover.

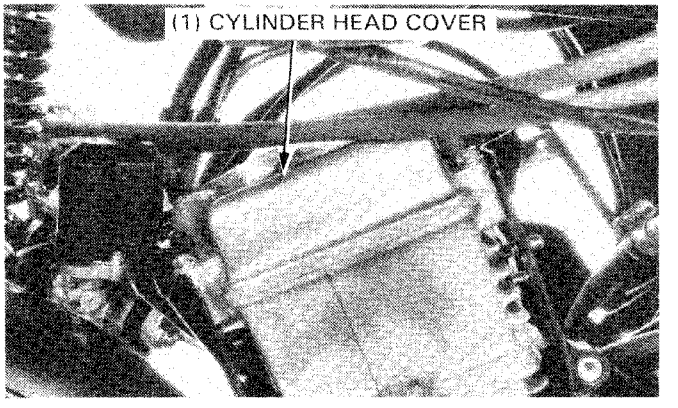

Turn the crankshaft and align the "T" mark on the flywheel with the index mark on the crankcase at TDC (Top Dead Center).
Remove the nut, washer and camshaft holder.

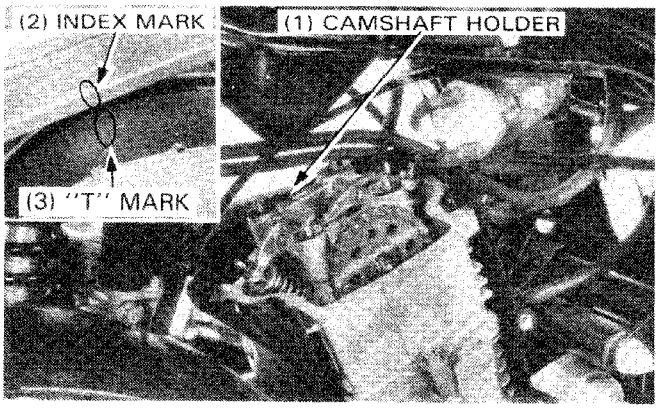

Remove the dowel pins.

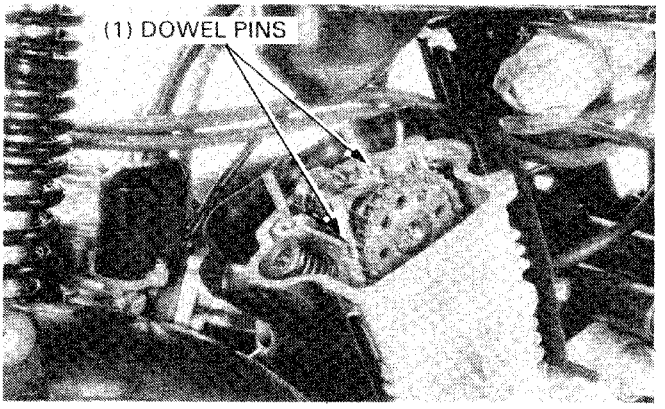

NOTE

- Suspend the cam chain with a piece of wire to keep it from falling into the crankcase.

Lift up the left side of the camshaft, remove the cam chain from the cam sprocket and remove the camshaft.

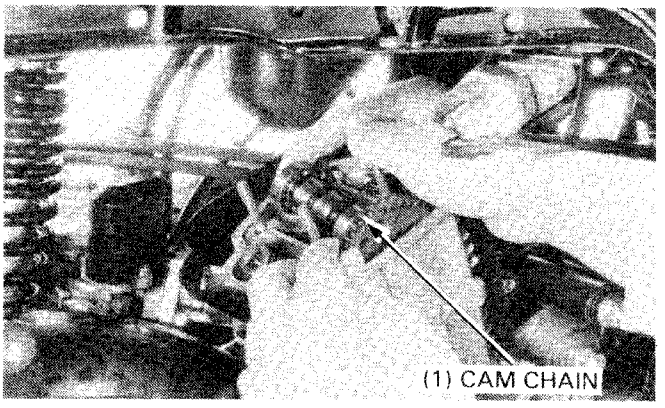

INSPECTION

Camshaft
Check each camshaft bearing for play or damage.
Replace the camshaft assembly if it's noisy or has excessive play.

Check the cam sprocket for wear or damage and replace it if necessary.

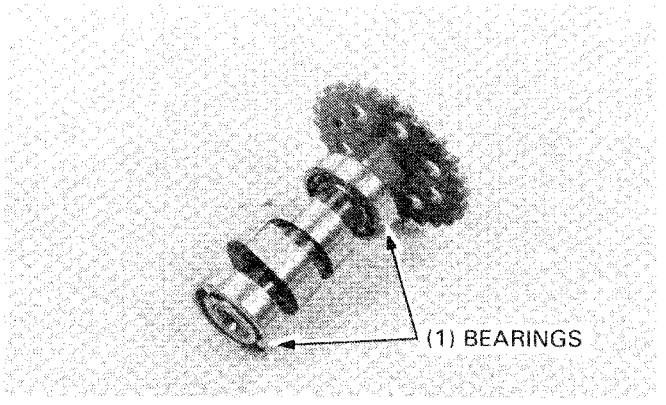

Check each cam lobe for wear or damage.
Measure the cam lobe height.

SERVICE LIMITS:
IN: 28.0 mm (1.10 in)
EX: 27.8 mm (1.09 in)

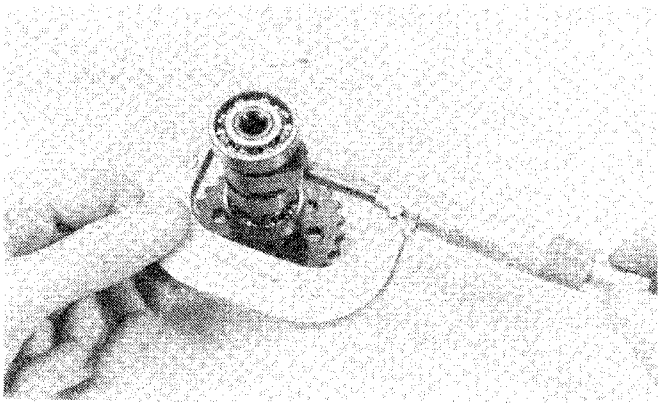

Rocker Arm/Rocker Arm Shaft
Remove the rocker arm shaft cap.
Remove the rocker arm shafts while tapping the rocker arm holder with a plastic hammer.
Remove the rocker arms.

NOTE

- If you cannot remove the rocker arm shafts by tapping with a plastic hammer, insert the 8 mm bolt into the rocker arm shafts and pull them out.
- Mark the rocker arm and rocker arm shafts to ensure the correct reassembly.

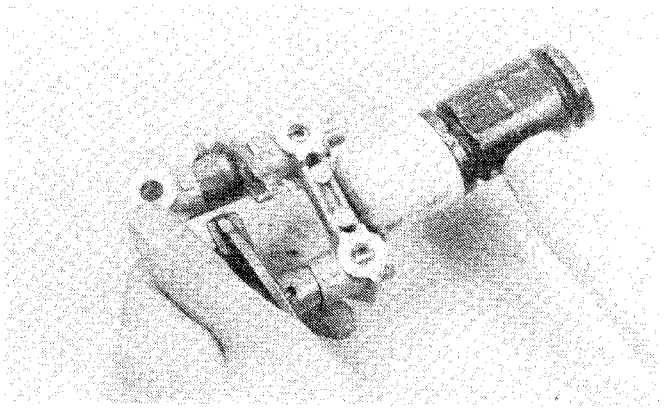

Inspect the rocker arms for wear or damage to the camshaft contact surface or for a clogged oil hole.
Measure the I.D. of each rocker arm.

SERVICE LIMIT: 10.10 mm (0.398 in)

NOTE

- Also check the camshaft cam lobe for wear or damage.

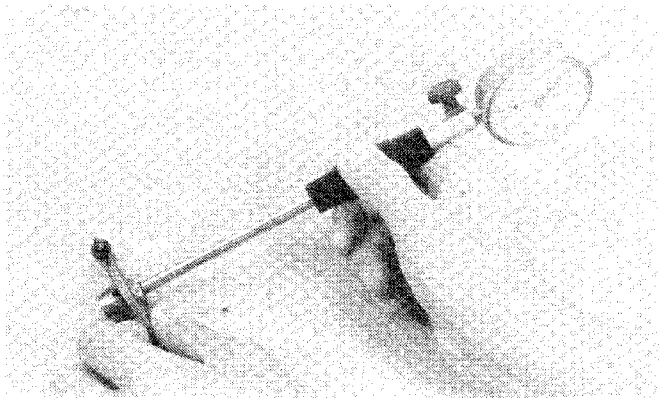

Inspect the rocker arm shafts for wear or damage.
Measure the O.D. of each rocker arm shaft.

SERVICE LIMIT: 9.91 mm (0.390 in)

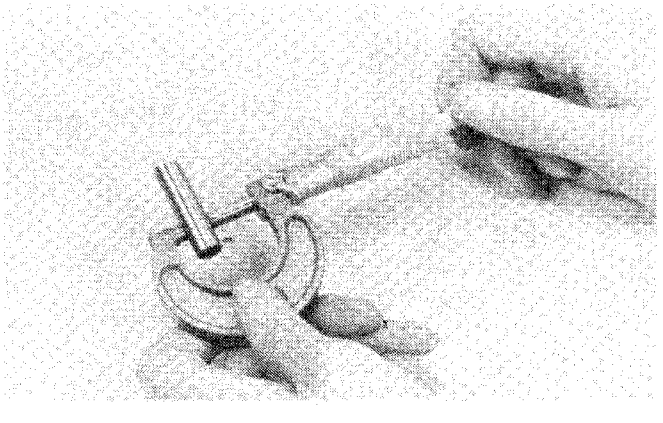

CAMSHAFT HOLDER ASSEMBLY

Clean each parts of the assembly in solvent and lubricate them with clean engine oil.
Set the rocker arm on the camshaft holder and install the rocker arm shafts.

NOTE

- Install the rocker arm shaft with the threaded side facing out.
- Loosen the rocker arm lock nut and fully loosen the valve adjuster screw.

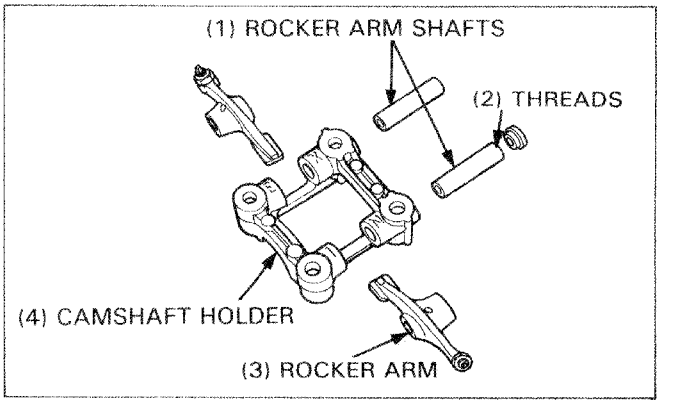

INSTALLATION

Turn the crankshaft and align the "T" mark on the flywheel with the index mark on the crankcase.

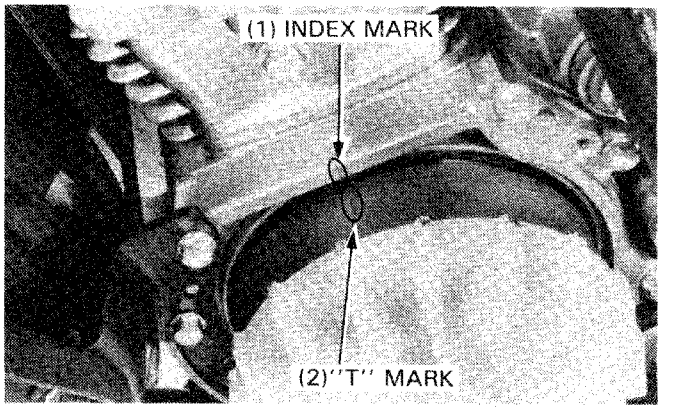

Lubricate the camshaft bearings with clean engine oil.
Align the timing marks on the cam sprocket with the cylinder head surface and install the cam chain over the cam sprocket.

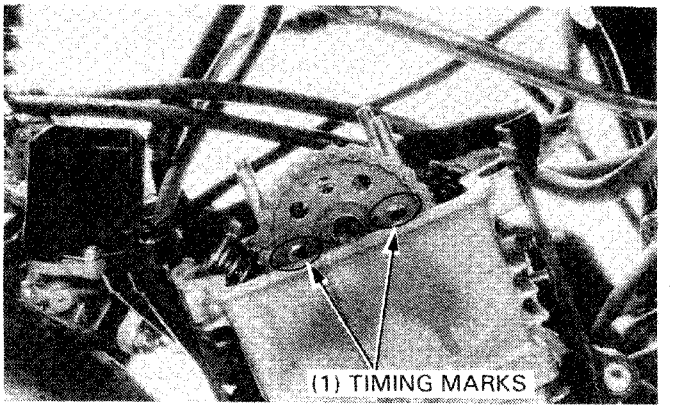

Install the dowel pins.
Install the camshaft holder with the rocker arm shaft installation holes facing the cam sprocket.
Install the stopper plate on the right front cylinder head stud bolt.
Tighten the nuts in a crisscross pattern to the specified torque.

TORQUE: 10–14 N·m (1.0–1.4 kg-m, 7–10 ft-lb)

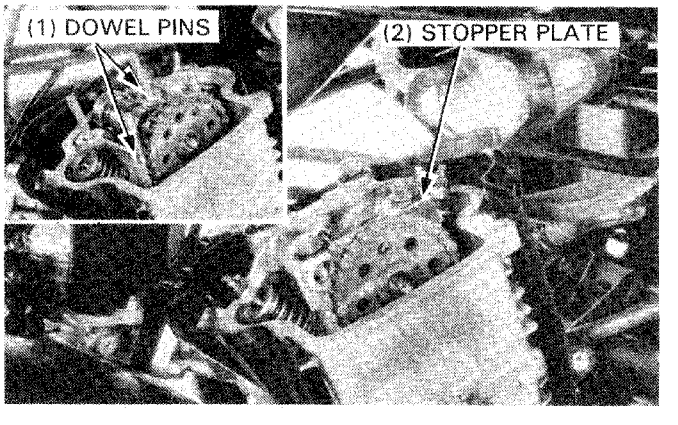

Install the push rod, tensioner spring and sealing washer. Tighten the sealing bolt to the specified torque.

TORQUE: 38–45 N·m (3.8–4.5 kg-m, 27–33 ft-lb)

NOTE

- Install the tensioner spring with its smaller diameter end facing the push rod.
- Check the sealing washer for wear or damage and replace it if necessary.

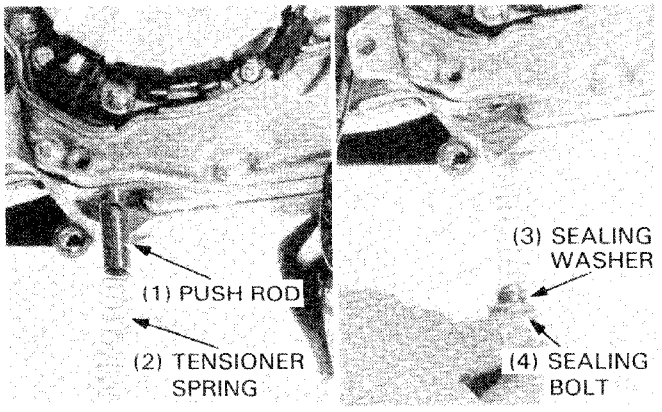

Rotate the crankshaft and adjust the valve clearance (page 3-5).
Fill the cylinder head oil pocket with the engine oil.

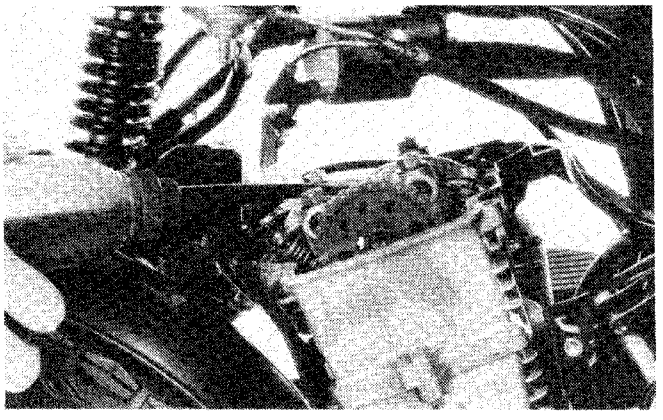

Make sure that the O-ring is in place and then install the cylinder head cover.

TORQUE: 10–14 N·m (1.0–1.4 kg-m, 7–10 ft-lb)

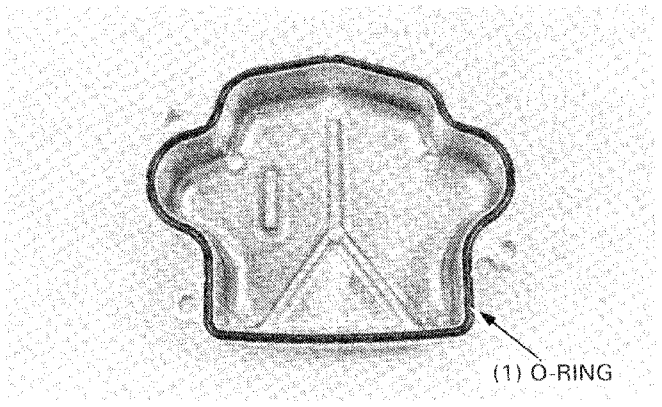

Install the top shroud and fan cover.
Install the right and left frame covers (page 12-4).

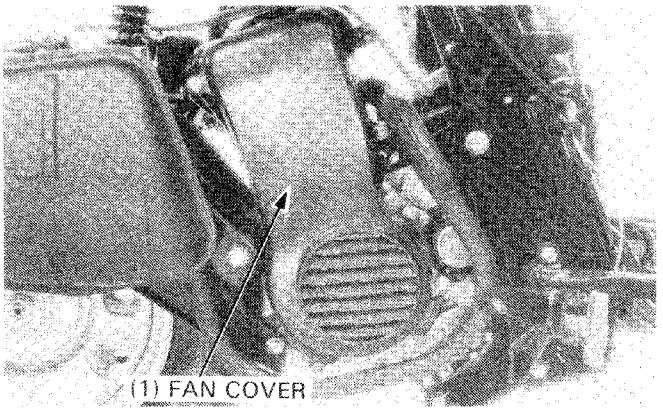

CYLINDER HEAD REMOVAL

Remove the following:
- muffler (page 5-3).
- carburetor (page 4-3).
- fan cover and top shroud (page 6-3).
- fuel tank under cover.

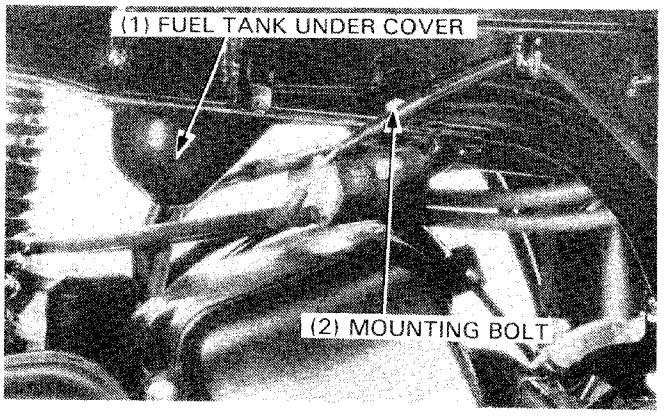

Remove the shroud.
Remove the cylinder head cover and camshaft (page 6-3).

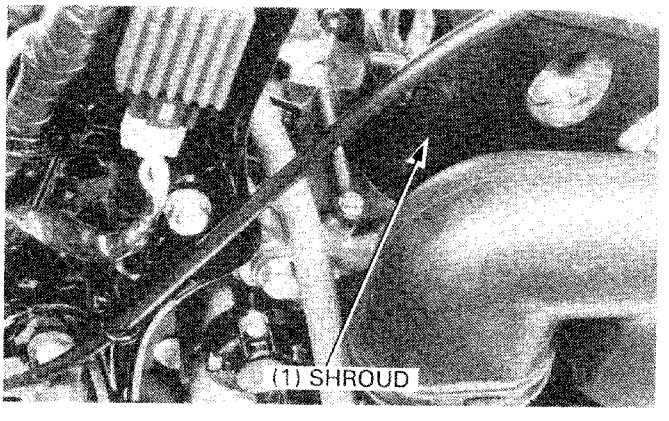

Remove the cylinder head bolts and cylinder head.

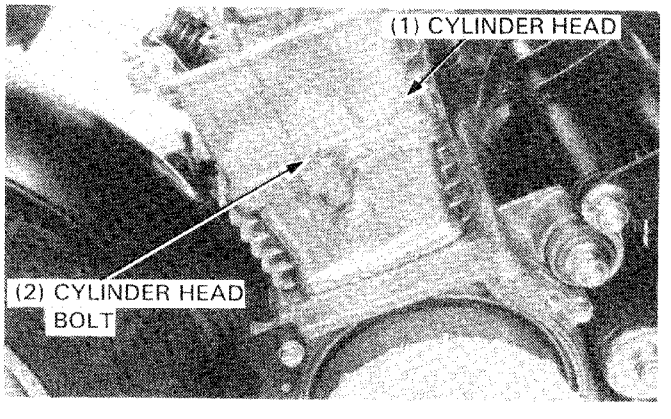

Remove the dowel pins, gasket and seal rubber.

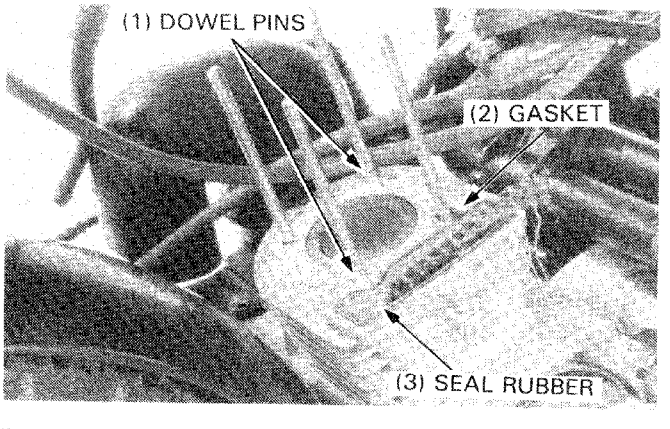

CYLINDER HEAD DISASSEMBLY

Remove the valve spring cotters, retainers, springs and valves with the valve spring compressor.

NOTE

- To prevent loss of tension, do not compress the valve springs more than necessary to remove the cotters.
- Mark all disassembled parts to ensure correct reassembly.

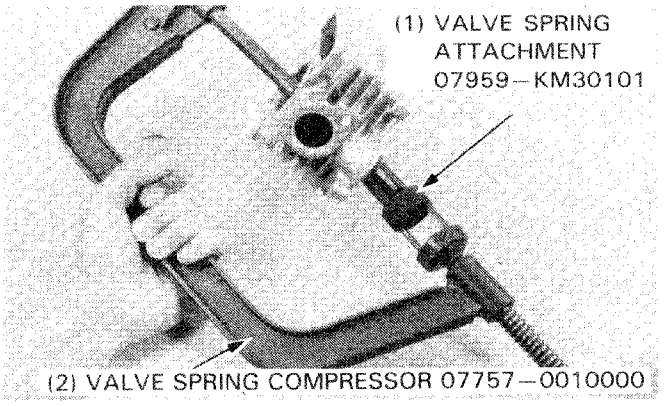

Remove carbon deposits from the combustion chamber. Clean off any gasket material from the cylinder head gasket surface.

NOTE

- Avoid damaging the gasket surfaces.
- Gasket will come off easier if soaked in solvent.

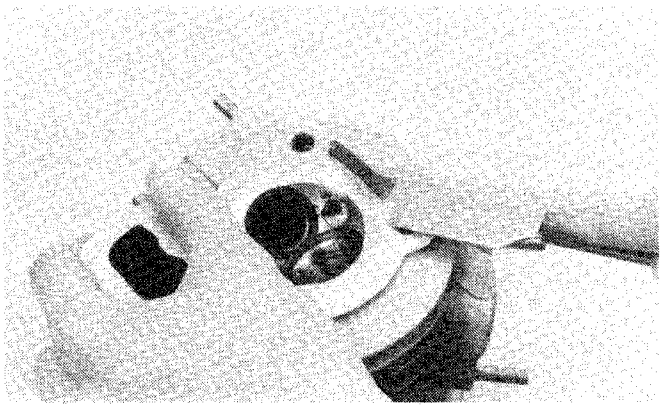

INSPECTION

Cylinder Head
Check the spark plug hole and valve areas for cracks.
Check the cylinder head for warpage with the straight edge and feeler gauge.

SERVICE LIMIT: 0.05 mm (0.02 in)

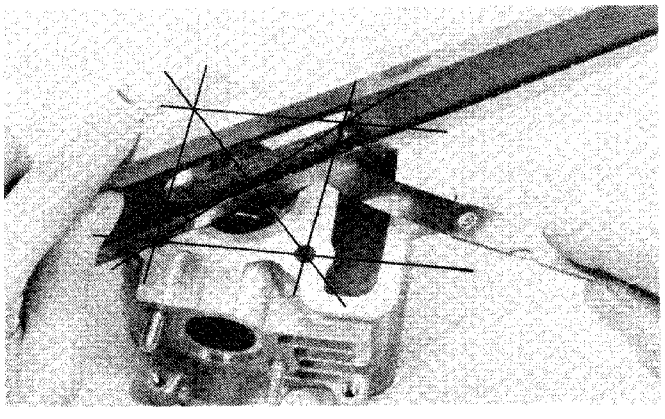

Valve Spring Free Length
Measure the free length of the inner and outer valve springs.

SERVICE LIMITS:
INNER (IN, EX): 29.5 mm (1.16 in)
OUTER (IN, EX): 29.3 mm (1.15 in)

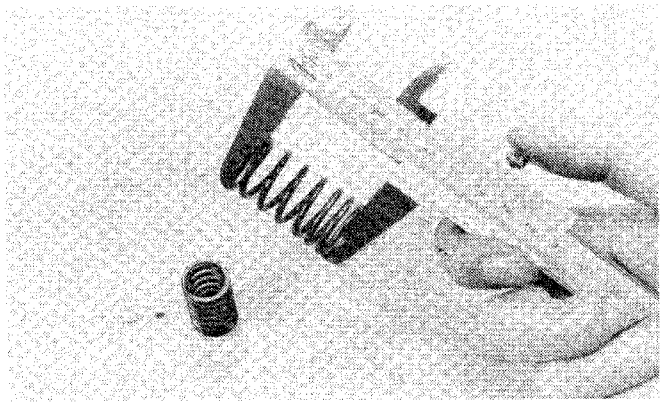

Valve/Valve Guide

Inspect each valve for bending, burning, scratches or abnormal stem wear.

Check valve movement in the guide and measure and record each valve stem O.D.

SERVICE LIMITS:
IN/EX: 4.90 mm (0.193 in)

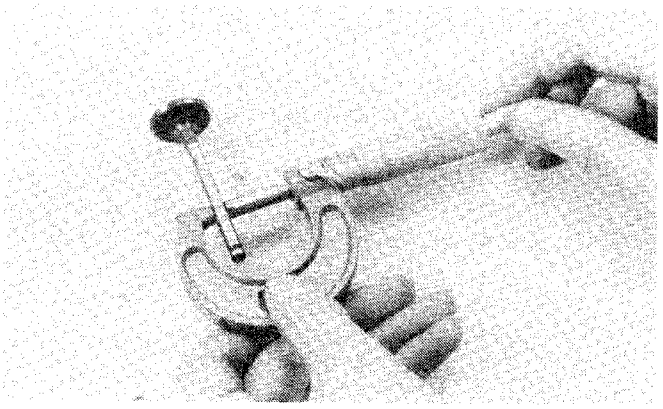

Ream the guides to remove any carbon build-up before checking clearance.

NOTE

- Always rotate the reamer to right. Do not insert or remove the reamer without rotating it.

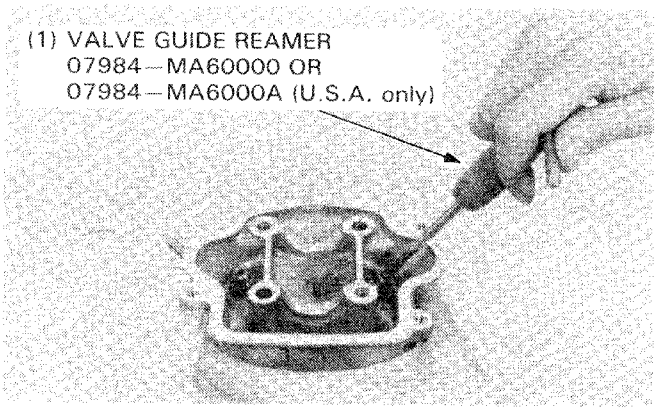

Measure and record each valve guide I.D.

SERVICE LIMITS:
IN/EX: 5.03 mm (0.198 in)

Subtract each valve stem O.D. from the corresponding guide I.D. to obtain the stem-to-guide clearance.

SERVICE LIMITS:
IN: 0.08 mm (0.003 in)
EX: 0.10 mm (0.004 in)

NOTE

- If the stem-to-guide clearance exceeds the service limits, determine if a new guide with standard dimensions would bring the clearance within tolerance. If so, replace guide as necessary and ream to fit.

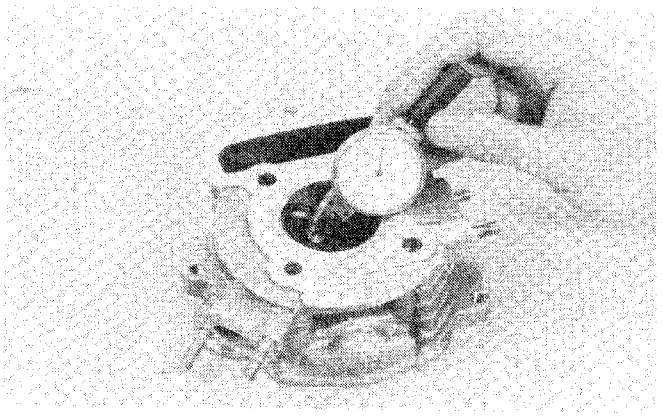

If the stem-to-guide clearance exceeds the service limits with new guide, also replace the valves.

NOTE

- Reface the valve seats whenever the valve guides are replaced (page 6-11).

VALVE GUIDE REPLACEMENT

REMOVAL

Heat the cylinder head to 100—150°C (212—300°F) with a hot plate or oven.
Drive the valve guide out.

CAUTION

- *Do not use a torch to heat the cylinder head: it may cause warping.*

WARNING

- ***To avoid burns, wear heavy gloves when handling the heated cylinder head.***

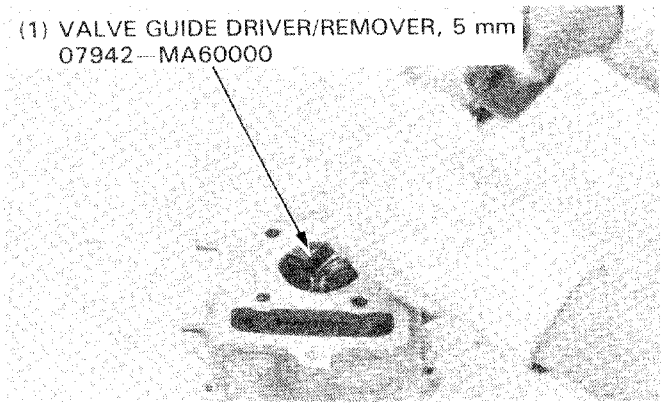

INSTALLATION

Heat the cylinder head to 100—150°C (212—300°F) with a hot plate or oven.
Drive the new O-ring into the valve guide.

CAUTION

- *Do not use a torch to heat the cylinder head: it may cause warping.*

WARNING

- ***To avoid burns, wear heavy gloves when handling the heated cylinder head.***

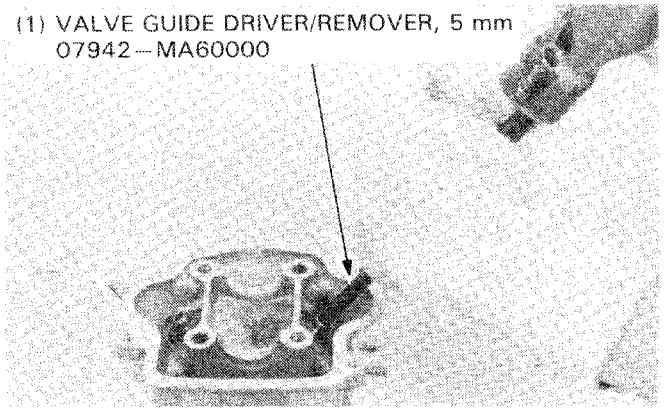

NOTE

- After driving the valve guide in, check the valve guide for damage.
- Take care not to damage the cylinder head surface while driving the valve guides in.

Let the cylinder head cool to room temperature and ream the new valve guides.

NOTE

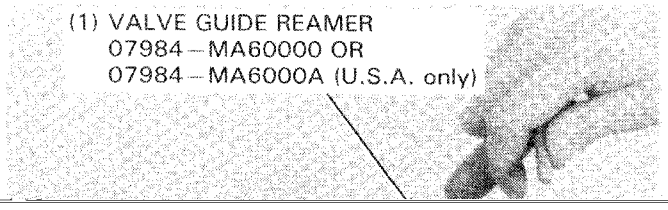

Inspect the valve seat.

If the seat is too wide, too narrow, or has low spots, the seat must be ground.

VALVE SEAT WIDTH:
STANDARD: 1.0 mm (0.04 in)
SERVICE LIMIT: 1.6 mm (0.06 in)

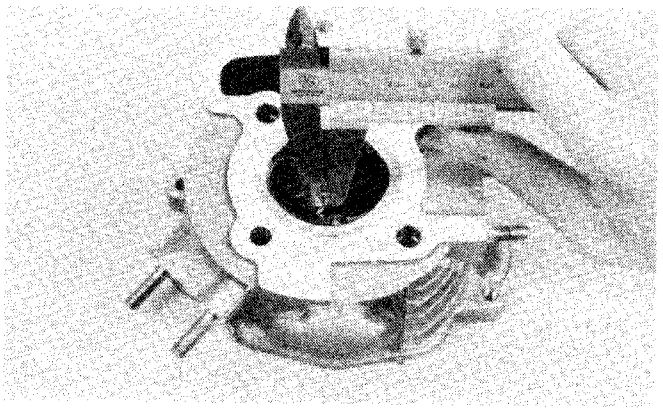

Measure the valve seat.

CAUTION

- *The valve cannot be ground. If the valve face is burned or badly worn or if it contacts the seat unevenly, replace the valve.*

SERVICE LIMIT: 2.0 mm (0.08 in)

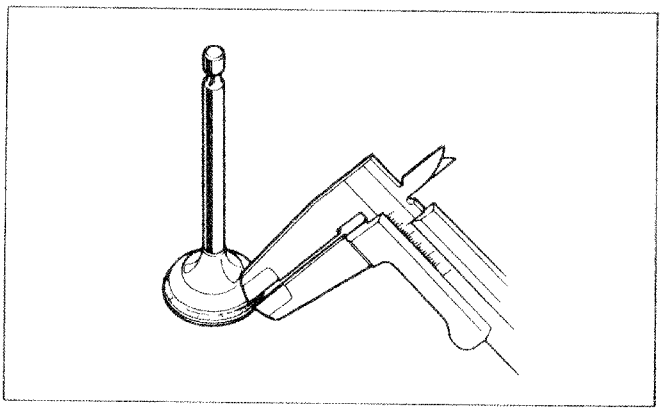

VALVE SEAT GRINDING

Using a 45 degree cutter, remove any roughness or irregularities from the seat.

NOTE

- Reface the seat with a 45 degree cutter when the valve guide is replaced.

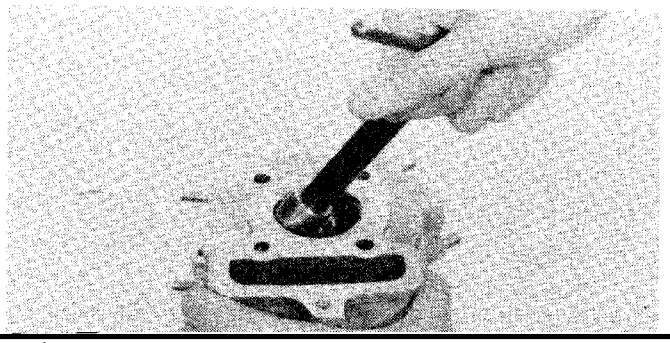

Using a 32 degree cutter, remove 1/4 of the existing valve seat material.

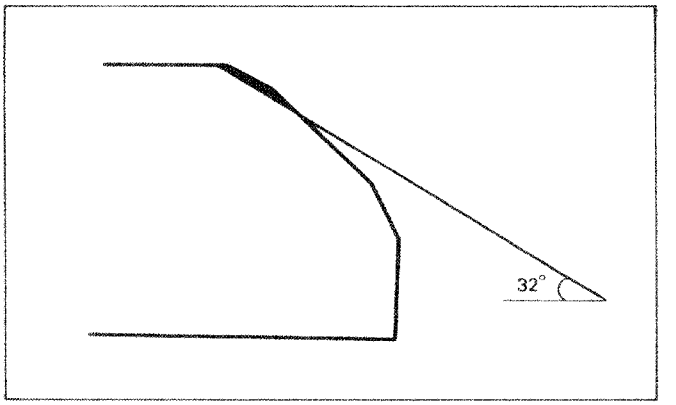

Using a 60 degree cutter, remove the bottom 1/4 of the old seat.

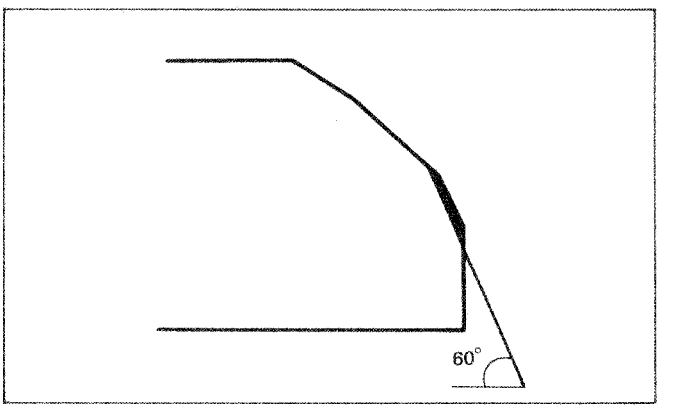

Using a 45 degree finish cutter, cut the seat to the proper width.

NOTE

- Make sure that all pitting and irregularities are removed. Refinish if necessary.

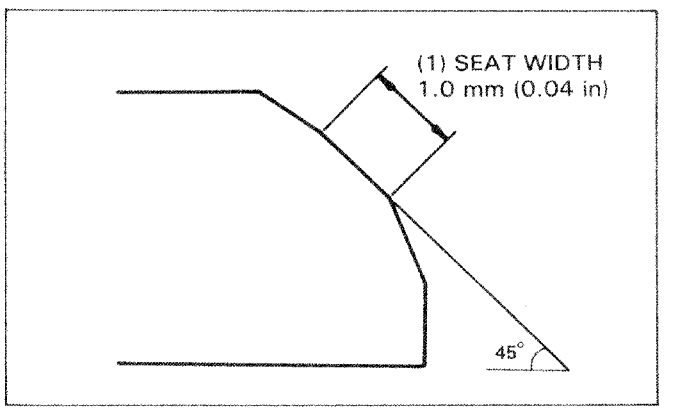

NOTE

- The location of the valve seat in relation to the valve face is very important for good sealing and maximum valve service.

Apply a thin coating of Prussian Blue to the valve seat.
Drop the valve through the valve guide and onto the seat to make a clear pattern.
Remove and inspect the valve.

If the contact area is too low on the valve, the seat must be raised using a 60 degree inner cutter.
Refinish the seat to the correct width, using a 45 degree finish cutter.

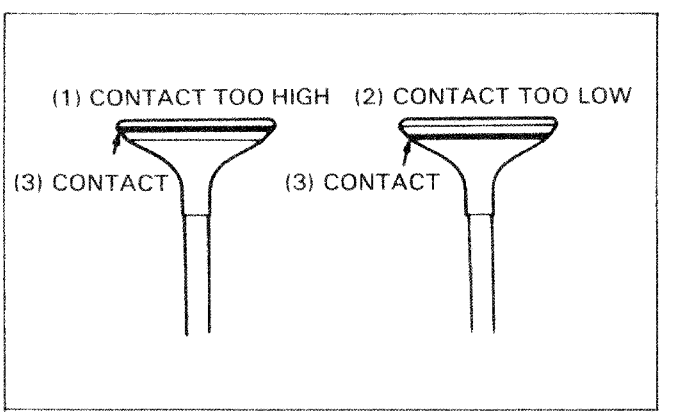

After cutting the seat, apply lapping compound to the valve face and lap the valve using light pressure. After lapping, wash all residual compound off the cylinder head, valve and guide.

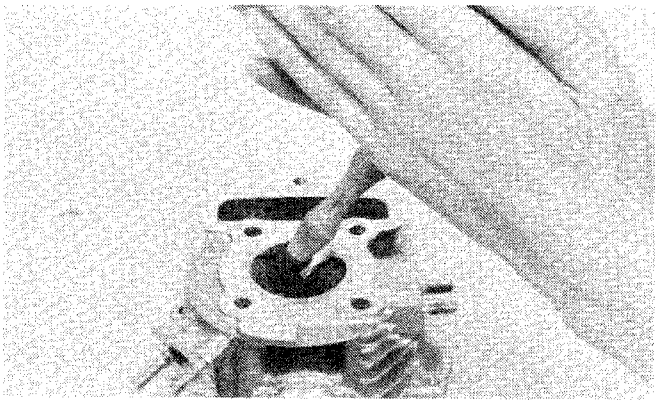

CYLINDER HEAD ASSEMBLY

(1) VALVE

Lubricate each valve stem with oil, and insert the valves into

Install the dowel pins and new gasket.
Install the seal rubber.

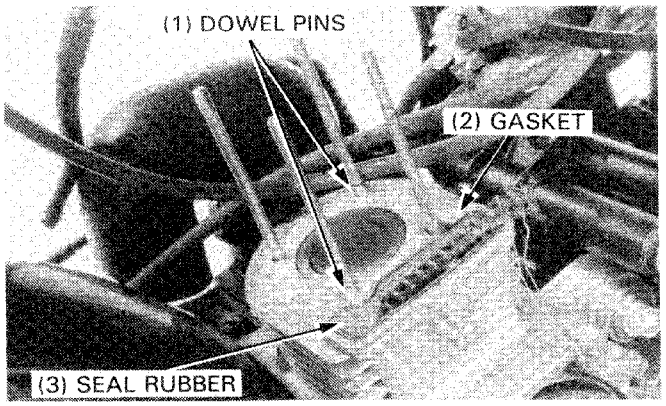

CYLINDER HEAD INSTALLATION

Install the cylinder head and loosely tighten the cylinder head bolt.

NOTE

- Tighten the cylinder head bolt to the specified torque after tightening the camshaft holder.

TORQUE: 8-12 N·m (0.8—1.2 kg-m, 6—9 ft-lb)

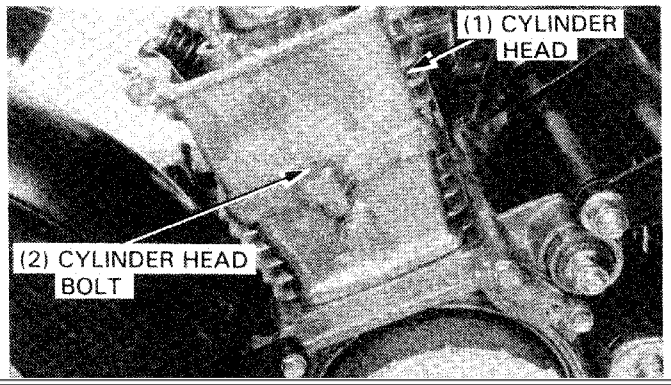

Install the following:

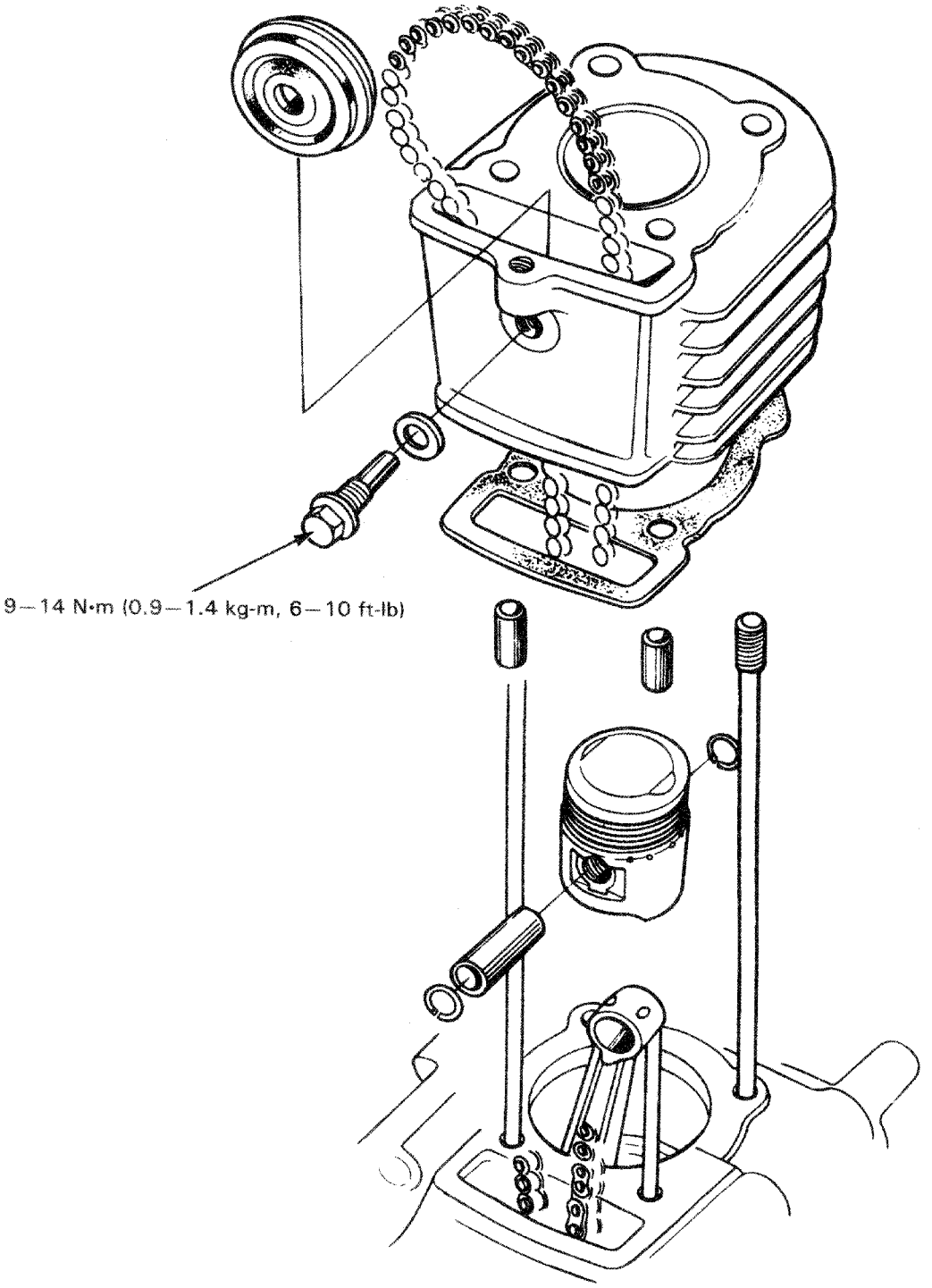
9—14 N•m (0.9—1.4 kg-m, 6—10 ft-lb)

SERVICE INFORMATION	7-1	PISTON REMOVAL	7-3
TROUBLESHOOTING	7-1	PISTON INSTALLATION	7-6
CYLINDER REMOVAL	7-2	CYLINDER INSTALLATION	7-6

SERVICE INFORMATION

GENERAL

- The cylinder and piston should be serviced with the engine removed from the frame.
- Inspect the oil passages for clogging before installing the cylinder.

SPECIFICATIONS

ITEMS			STANDARD	SERVICE LIMIT
Cylinder	I.D.		49.500—49.510 mm (1.9488—1.9492 in)	49.63 mm (1.954 in)
	Warpage		——	0.05 mm (0.002 in)
Piston, Piston ring, Piston pin	Ring-to-groove clearance	Top/Second	0.015—0.050 mm (0.0006—0.0020 in)	0.12 mm (0.005 in)
	Ring end gap	Top	0.10—0.30 mm (0.004—0.012 in)	0.50 mm (0.020 in)
		Oil (Side rail)	0.2—0.7 mm (0.08—0.028 in)	——
	Piston O.D.		49.475—49.495 mm (1.9478—1.9486 in)	49.40 mm (1.945 in)
	Piston pin bore		13.002—13.008 mm (0.5112—0.5121 in)	13.06 mm (0.514 in)
	Connecting rod small end I.D.		13.016—13.034 mm (0.5124—0.5131 in)	13.10 mm (0.516 in)
	Piston pin O.D.		12.994—13.000 mm (0.5116—0.5118 in)	12.98 mm (0.511 in)
	Cylinder-to-piston clearance		0.005—0.035 mm (0.0002—0.0014 in)	0.15 mm (0.006 in)
	Piston-to-piston pin clearance		0.002—0.014 mm (0.0001—0.0006 in)	0.08 mm (0.003 in)

TORQUE VALUE

Cam chain guide roller bolt	9—14 N·m (0.9—1.4 kg-m, 7—10 ft-lb)

TROUBLESHOOTING

Low or uneven compression
- Worn cylinder or piston ring

Excessive smoke
- Worn cylinder, piston or piston rings
- Improperly installed piston rings
- Damaged piston or cylinder

Overheating
- Excessive carbon built-up on piston head
- Blocked or restricted flow of coolant
- Sticking thermostat

Knocking or abnormal noise
- Worn piston and cylinder
- Excessive carbon built-up on piston head

CYLINDER REMOVAL

Remove the cylinder head (page 6-8).
Remove the guide roller bolt and guide roller.

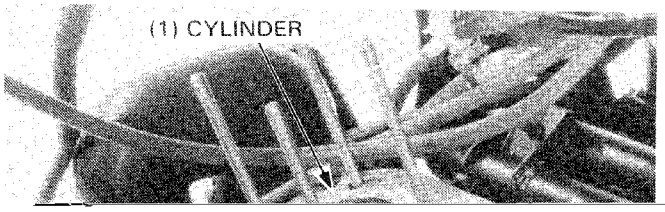

Inspect the top of the cylinder for warpage.

SERVICE LIMIT: 0.05 mm (0.002 in)

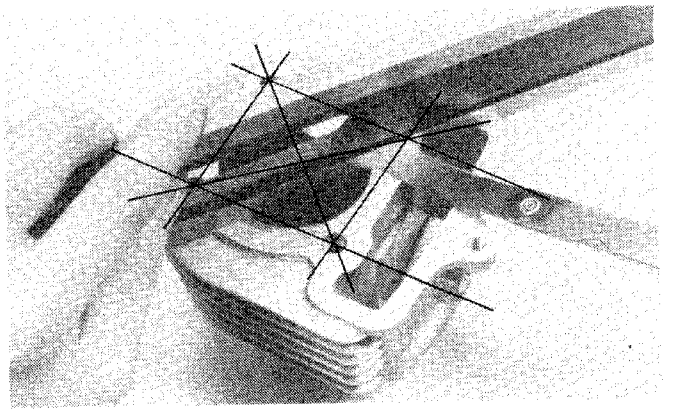

PISTON REMOVAL

Place clean shop towels in the crankcase to keep the piston pin clips or other parts from falling into the crankcase.

Remove the piston pin clips with pliers.

Press the piston pin out of the piston.

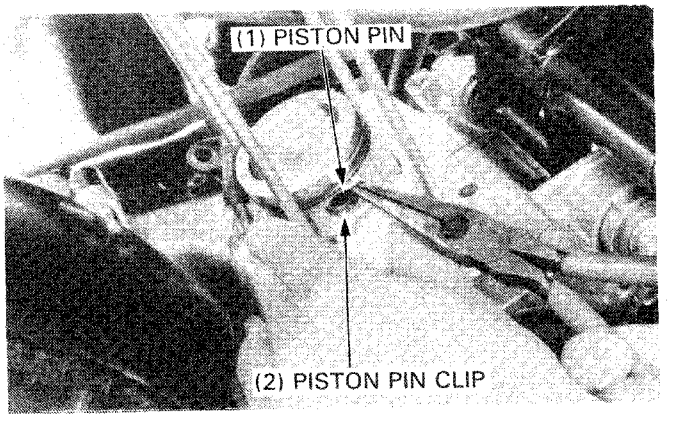

PISTON/PISTON RING INSPECTION

Measure the ring-to-groove clearance.

SERVICE LIMITS:
TOP: 0.12 mm (0.005 in)
2nd: 0.12 mm (0.005 in)

Inspect the piston for damage and the ring grooves for wear.

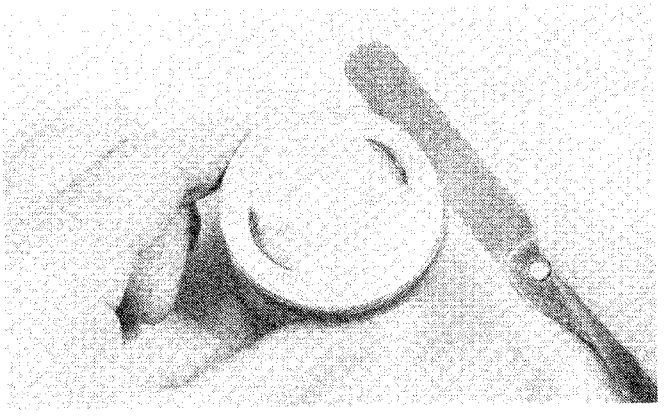

Measure the piston O.D.

NOTE

- Take measurements at 10 mm (0.4 in) from the bottom and 90° to the piston pin hole.

SERVICE LIMIT: 49.40 mm (1.945 in)

Calculate the cylinder-to-piston clearance.

SERVICE LIMIT: 0.15 mm (0.006 in)

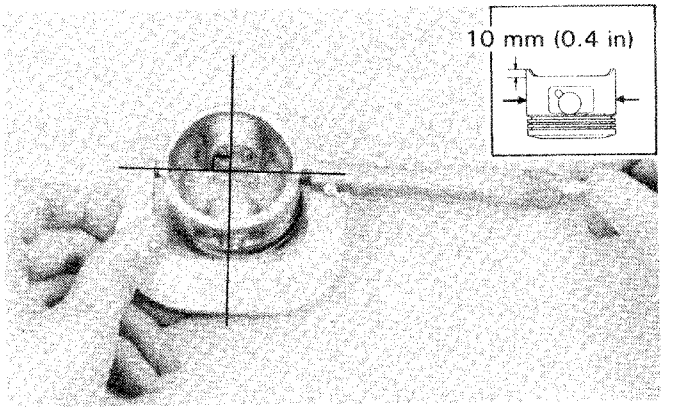

Measure the piston pin hole I.D.

SERVICE LIMIT: 13.06 mm (0.514 in)

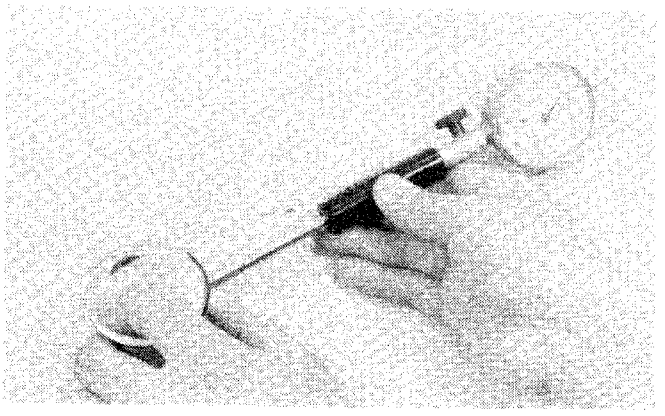

Measure the piston pin O.D.

SERVICE LIMIT: 12.98 mm (0.511 in)

Calculate the piston-to-pin clearance.

SERVICE LIMIT: 0.08 mm (0.003 in)

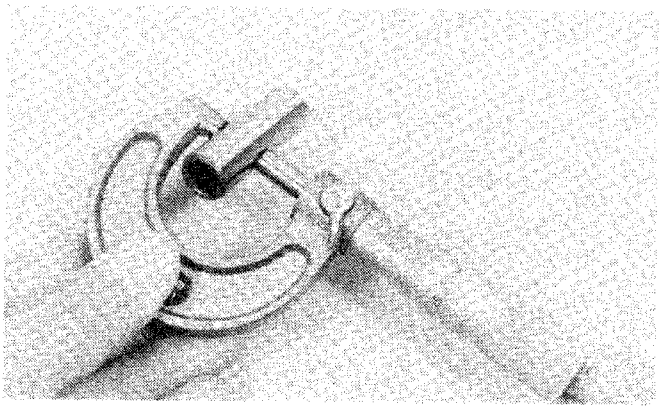

Measure the connecting rod small end I.D.

SERVICE LIMIT: 13.10 mm (0.516 in)

See section 11 for crankshaft removal.

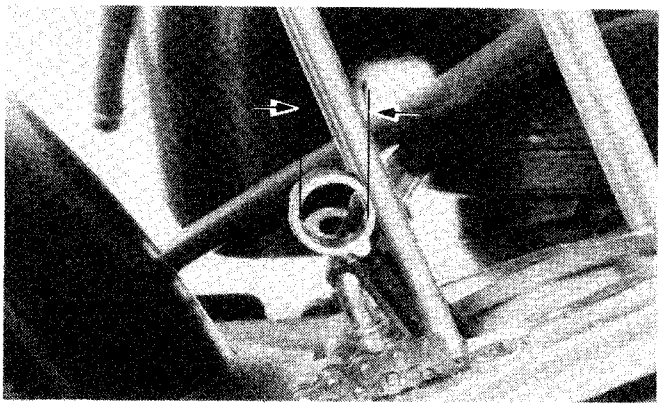

Remove the piston rings.

CAUTION

- *Piston rings are easily broken. Take care not to damage them during removal.*

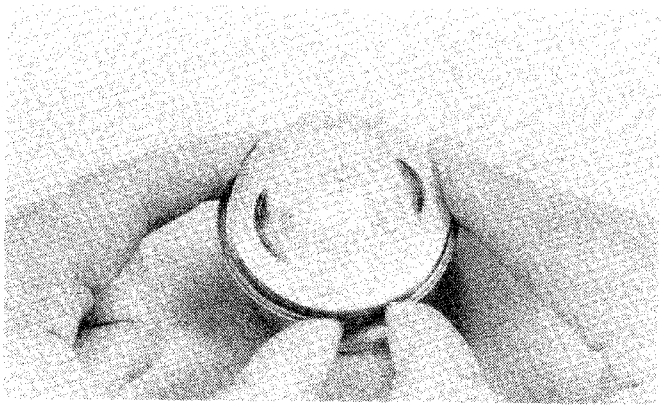

PISTON INSTALLATION

Remove any gasket material from the crankcase surface.

NOTE

- Be careful not to get the gasket material in the crankcase.

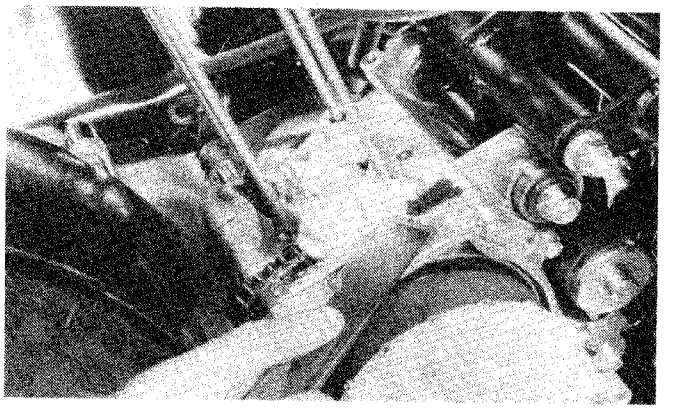

NOTE

- Do not align the piston pin clip end gap with the piston cut-out.
- Place a shop towel around the piston skirt and in the crankcase to prevent the piston pin clips from falling into the crankcase.

Install the piston and piston pin. Position the piston "IN" mark on the intake valve side.
Install new piston pin clips.

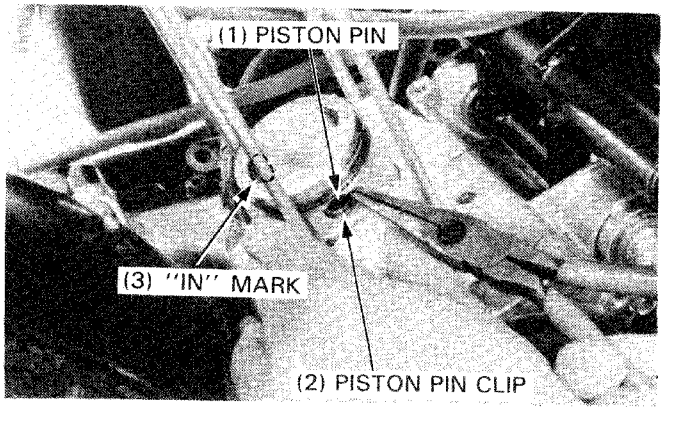

CYLINDER INSTALLATION

Install the dowel pins and a new cylinder gasket.

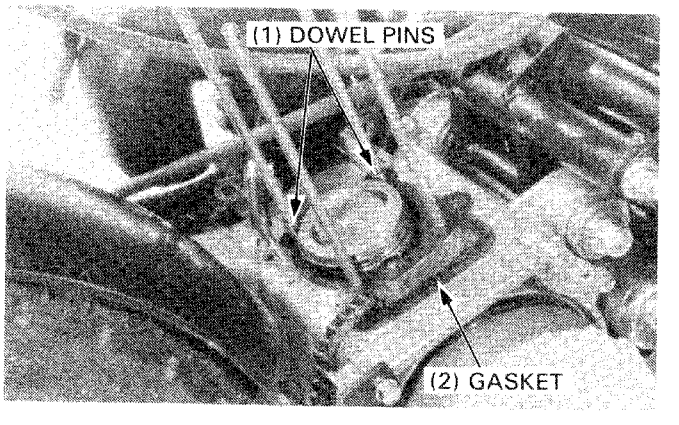

Remove any gasket material from the cylinder surface.

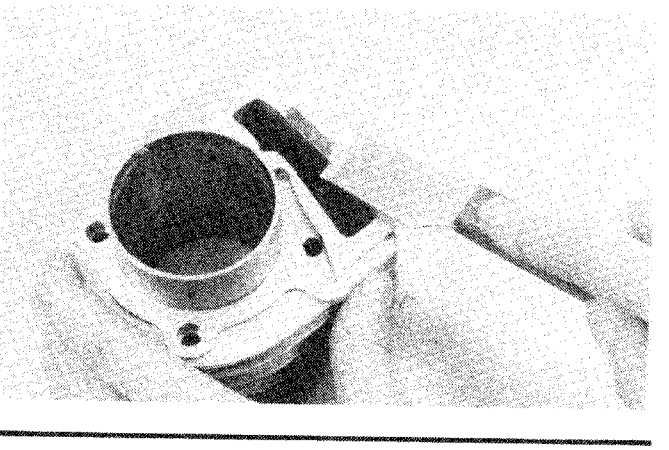

Coat the cylinder bore with fresh engine oil.
Carefully lower the cylinder over the piston by compressing the piston rings, one at a time.

NOTE

- Do not force the cylinder over a ring: you may damage the piston and piston rings.

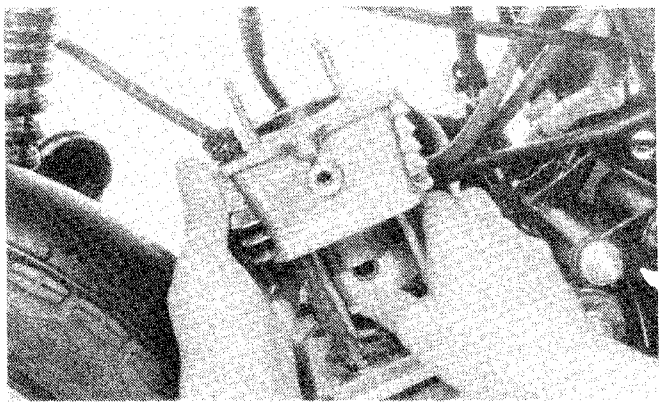

Install the cam chain guide roller and roller bolt.

TORQUE: 9-14 N·m (0.9-1.4 kg-m, 7-10 ft-lb)

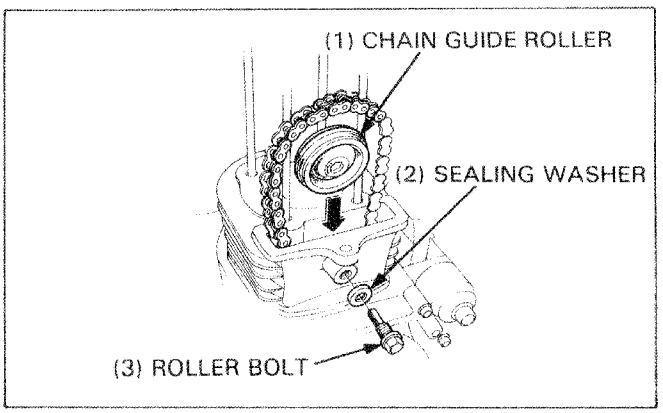

Install the cylinder head (page 6-15).

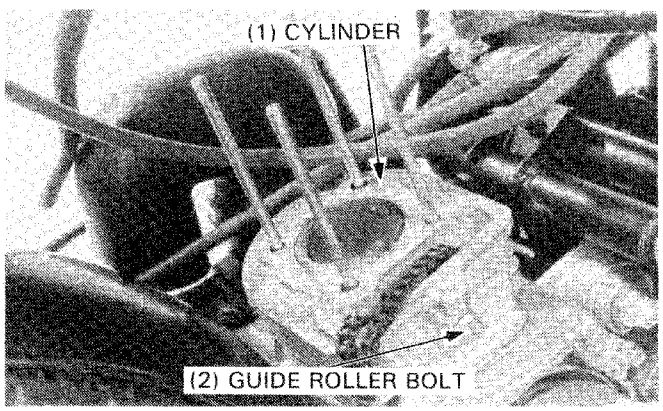

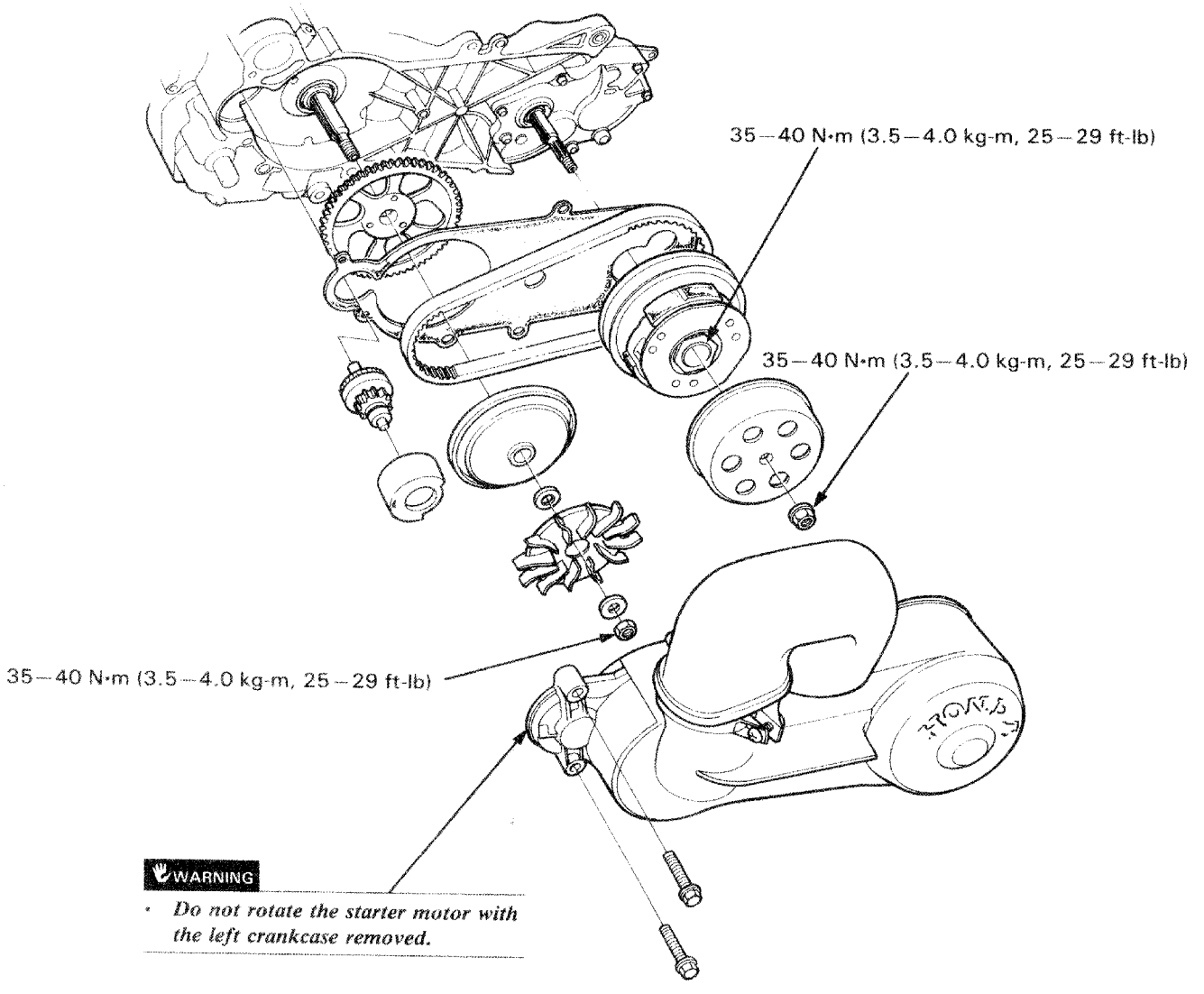

WARNING

- *Do not rotate the starter motor with the left crankcase removed.*

8. DRIVE PULLEY/CLUTCH/DRIVEN PULLEY

SERVICE INFORMATION	8-1	DRIVE PULLEY	8-4
TROUBLESHOOTING	8-2	CLUTCH/DRIVEN PULLEY	8-8
DRIVE BELT	8-3	STARTER	8-14

SERVICE INFORMATION

GENERAL

- Avoid getting grease and oil on the drive belt and pulley faces.
- Avoid turning the starter motor with left crankcase cover removed.

WARNING

- *Inhaled asbestos fibers have been found to cause respiratory disease and cancer. Nerer use an air hose or dry brush to clean brake or clutch assemblies. In the united stated, use an OSHA-approved vacuum cleaner or alternate method approved by OSHA-designed to minimize the hazard caused by airborn asbestos fibers.*

8

SPECIFICATIONS

ITEMS		STANDARD	SERVICE LIMIT
Drive belt width		16.5 mm (0.65 in)	15.0 mm (0.59 in)
Drive pulley	Movable drive face bushing I.D.	22.0—22.021 mm (0.8661—0.8670 in)	22.07 mm (0.8691 in)
	Drive face boss O.D.	21.97—21.99 mm (0.8650—0.8657 in)	21.94 mm (0.864 in)
	Weight roller O.D.	17.92—18.08 mm (0.706—0.712 in)	17.4 mm (0.69 in)
Clutch, driven pulley	Clutch outer I.D.	112.0—112.2 mm (4.409 —4.417 in)	112.5 mm (4.43 in)
	Clutch lining thickness	4.0—4.1 mm (0.157—0.161 in)	2.0 mm (0.08 in)
	Driven face spring free length	88.3 mm (3.476 in)	86.3 mm (3.40 in)
	Driven face assembly O.D.	33.950—33.975 mm (1.3366—1.3376 in)	33.93 mm (1.34 in)
	Driven face I.D.	34.000—34.025 mm (1.3386—1.3396 in)	34.06 mm (1.341 in)

TORQUE VALUES

Drive face	35—40 N•m (3.5—4.0 kg-m, 25—29 ft-lb)
Clutch outer	35—40 N•m (3.5—4.0 kg-m, 25—29 ft-lb)
Clutch lock nut	35—40 N•m (3.5—4.0 kg-m, 25—29 ft-lb)
Movable face seal	2.5—4 N•m (0.25—0.4 kg-m, 1.8—2.9 ft-lb)

TOOLS

Special

Lock nut wrench, 39 mm	07916—1870002
Clutch spring compressor	07960—KJ90000 or 07960—KM1000A
Attachment, 28 x 30 mm	07946—1870100
Bearing driver	07945—GC80000
Flywheel puller	07935—8050003

Common

Driver	07749—0010000
Pilot, 15 mm	07746—0040300
Universal holder	07725—0030000

TROUBLESHOOTING

Engine starts but scooter won't move
- Worn drive belt
- Damaged ramp plate
- Worn or damaged clutch lining
- Damaged driven face spring

Engine stalls or scooter creeps
- Broken clutch weight spring
- Damaged clutch lining

Poor performance at high speed or lack of power
- Worn drive belt
- Weak driven face spring
- Worn weight roller
- Faulty driven face

DRIVE BELT

REMOVAL

Remove the left side cover (page 12-2).
Remove the left crankcase cover mounting bolts and left crankcase cover.

WARNING

- *Never rotate the starter motor with the left crankcase cover removed.*

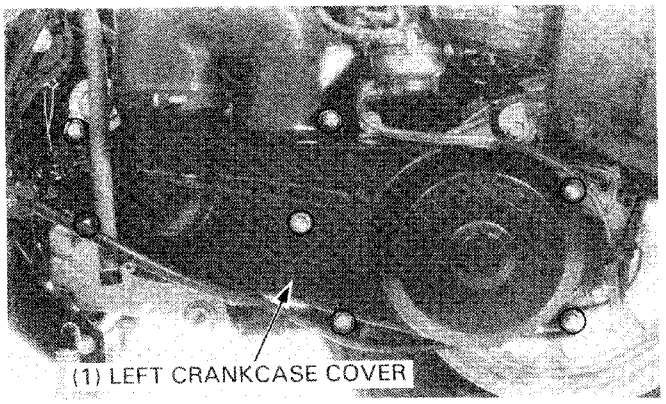

Squeeze the movable driven face together with both hands; this will allow slack in the drive belt.

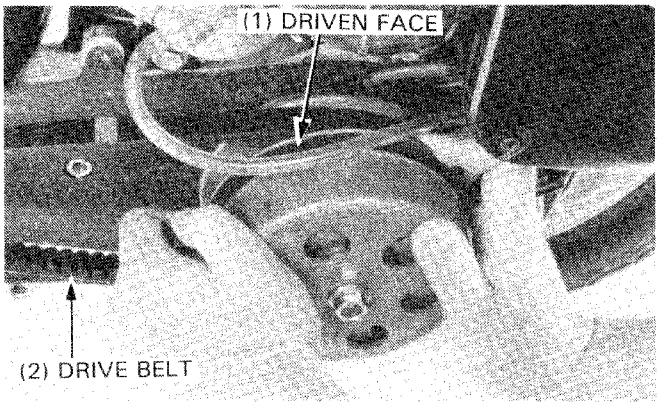

While holding the driven face together with one hand, remove the drive belt from the drive and driven pulleys.

INSTALLATION

NOTE

- Use a thin film of grease on the crankcase to hold the gasket in place during assembly.

Set the drive belt over the driven pulley.
Squeeze the movable driven face and loop the belt over the driven pulley.

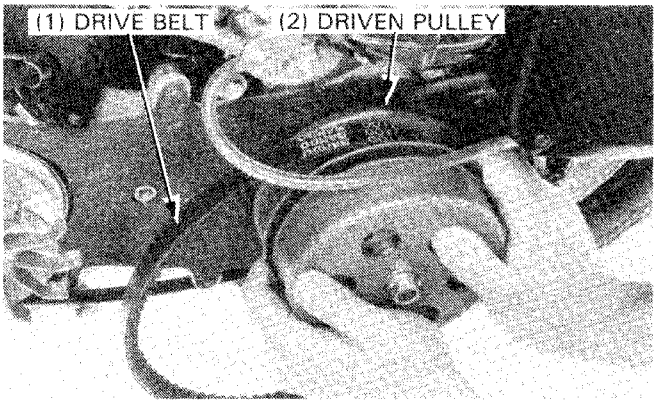

While holding the driven pully with a hand, set the drive belt over the drive pulley.

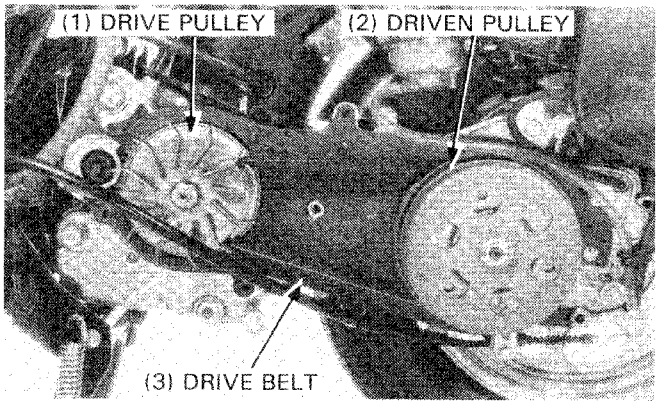

Install the left crankcase cover.
Tighten the crankcase cover bolts securely.

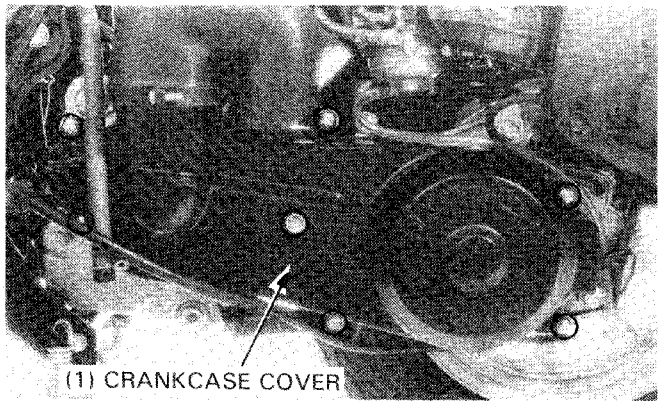

DRIVE PULLEY

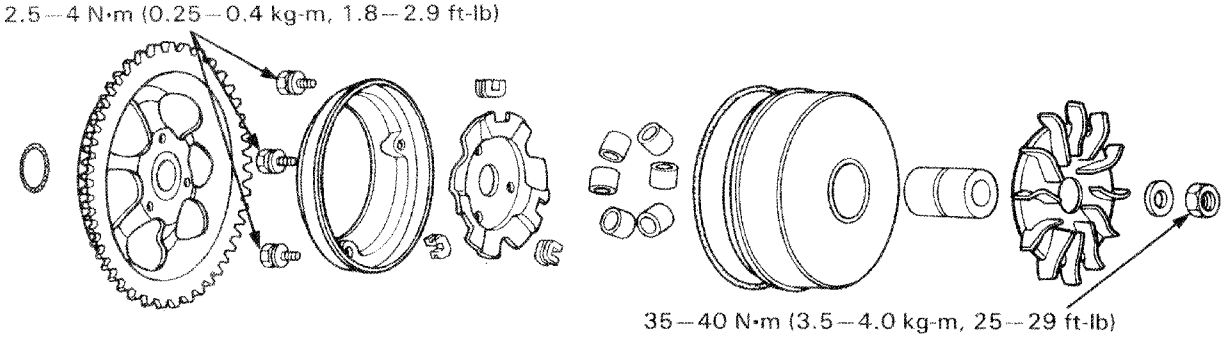

REMOVAL

Remove the following:
- left crankcase cover (page 8-3).
- right side cover and fan cover (page 6-3).
- alternator fan (page 10-2).

Hold the flywheel with a universal holder and remove the nut.
Remove the drive face and washer.

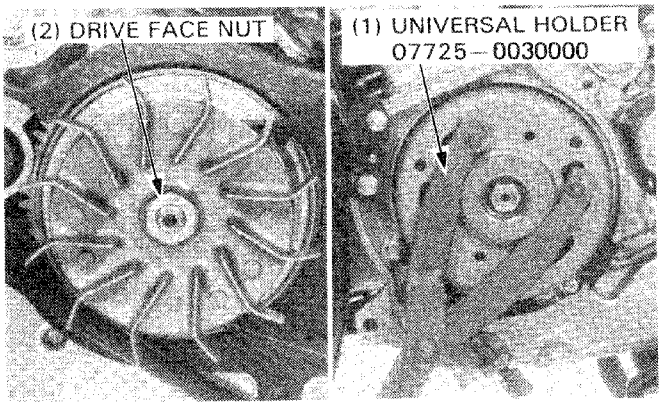

Remove the movable drive face.

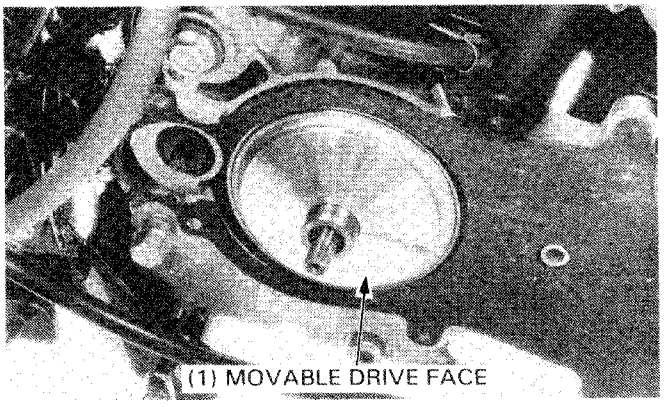

MOVABLE DRIVE FACE DISASSEMBLY

Remove the drive face boss.
Remove the bolts and movable drive face seal.

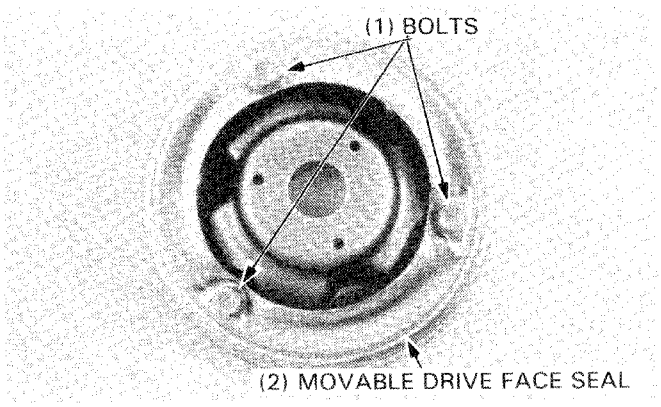

Remove the ramp plate.
Remove the O-ring.

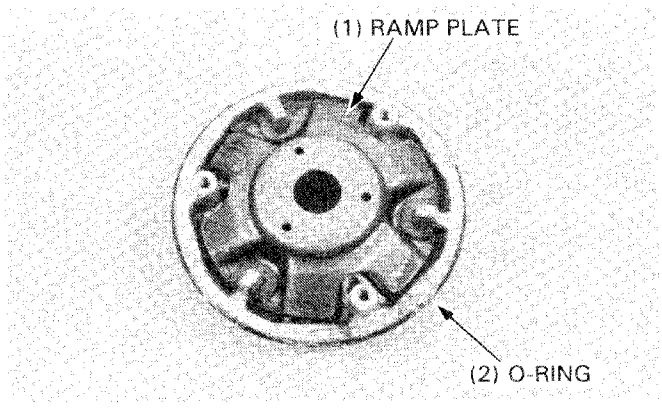

Remove the weight rollers.

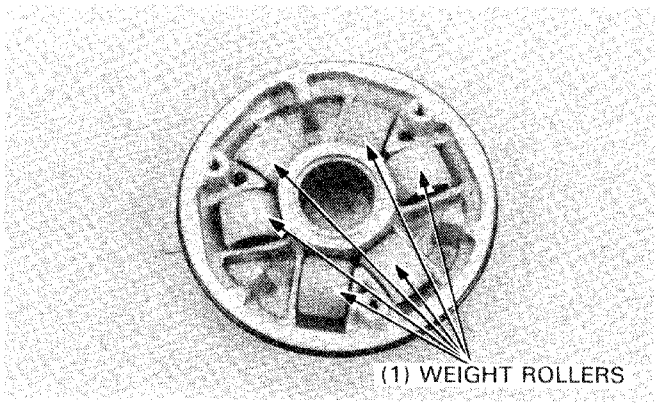

MOVABLE DRIVE FACE INSPECTION

Check each weight roller for wear or damage.

SERVICE LIMIT: 17.4 mm (0.69 in)

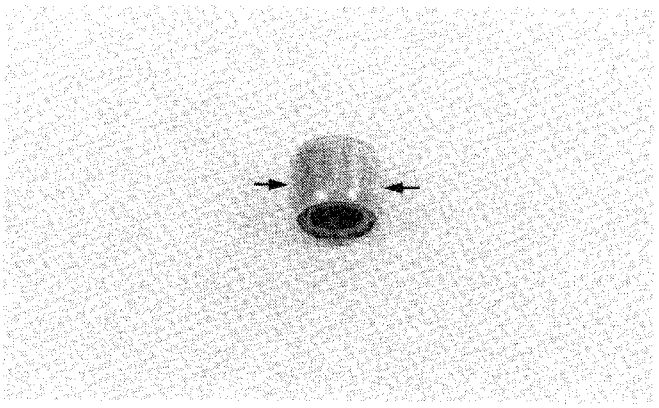

Measure the movable drive face bushing I.D.

SERVICE LIMIT: 22.07 mm (0.8691 in)

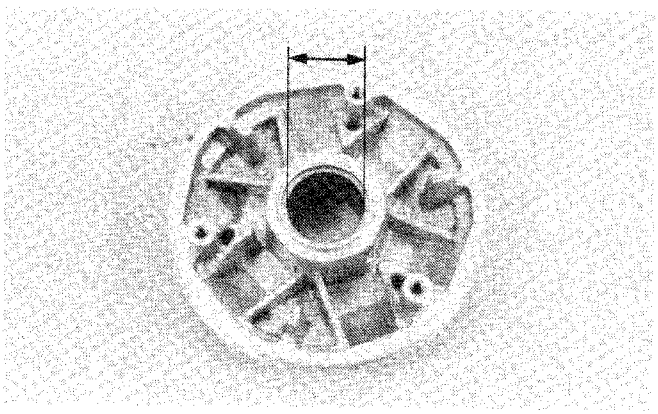

Check the drive face boss for wear or damage.
Measure the O.D. at the drive face sliding surface.

SERVICE LIMIT: 21.94 mm (0.864 in)

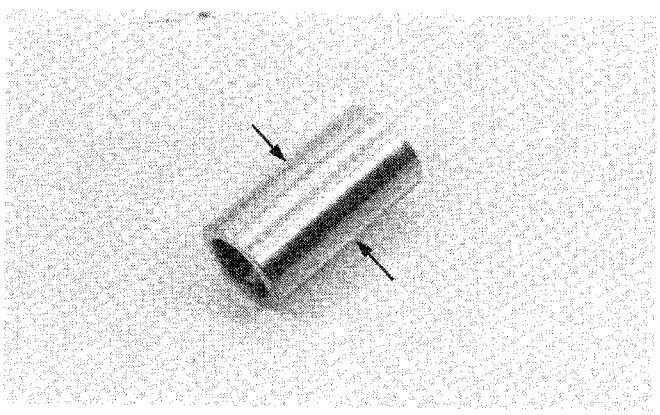

MOVABLE DRIVE FACE ASSEMBLY

Lubricate the inside of the drive face with grease, then install the weight rollers.

NOTE

Use 20—35g (0.7—1.2 oz) of grease and apply to the inside evenly.
Specified grease:
- Mitsubishi: HD-3
- Nippon Sekiyu: Lipanox Deluxe 3
- Idemitsu: Autolex B

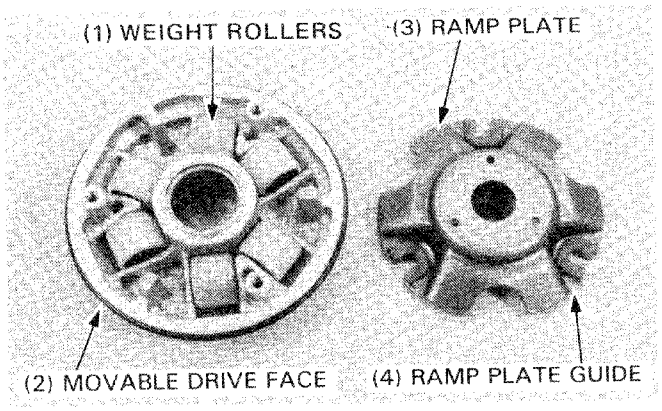

Install the ramp plate.

NOTE

- Make sure that the ramp plate guide is installed.

Apply small amount of grease to a new O-ring and install it on the movable drive face.
Install the face seal.

NOTE

- Make sure that the O-ring is in position.

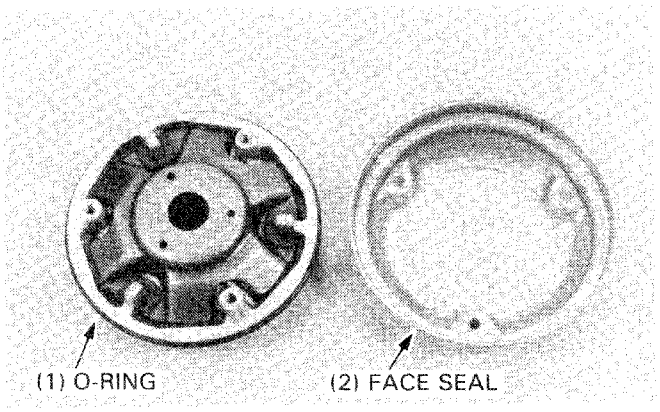

Tighten the face seal bolt.

TORQUE: 2.5—4.0 N·m (0.25—0.4 kg-m, 1.8—2.9 ft-lb)

DRIVE PULLEY INSTALLATION

Install the movable drive face boss on the movable drive face and then install them on the crankshaft.

NOTE

- Clean any grease or oil off the drive pulley faces.

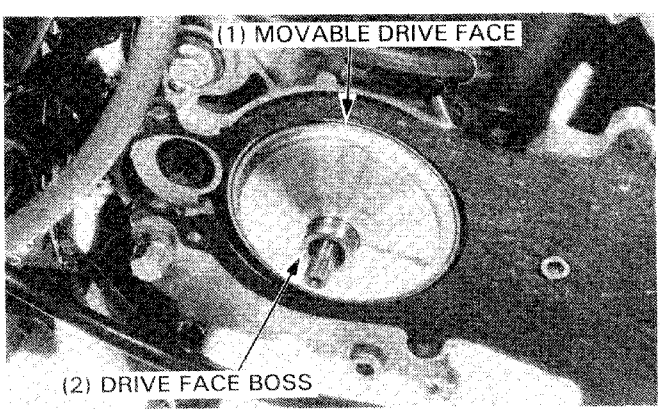

Hold the flywheel with a universal holder, install the drive face, washer and nut and then tighten the drive pulley nut to the specified torque.

TORQUE: 35—40 N·m (3.5—4.0 kg-m, 25—29 ft-lb)

Install the drive belt (page 8-4).
Install the left crankcase cover (page 8-4).

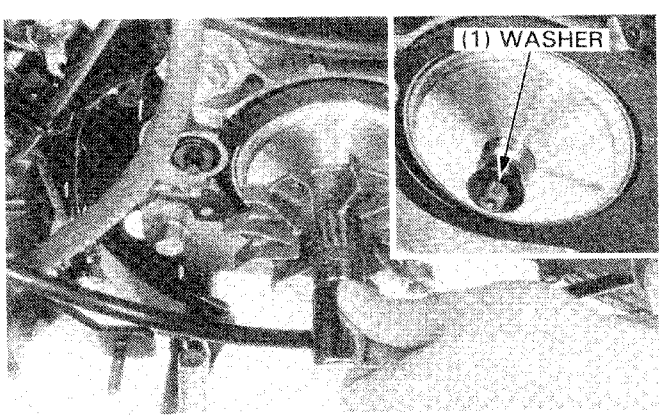

CLUTCH/DRIVEN PULLEY

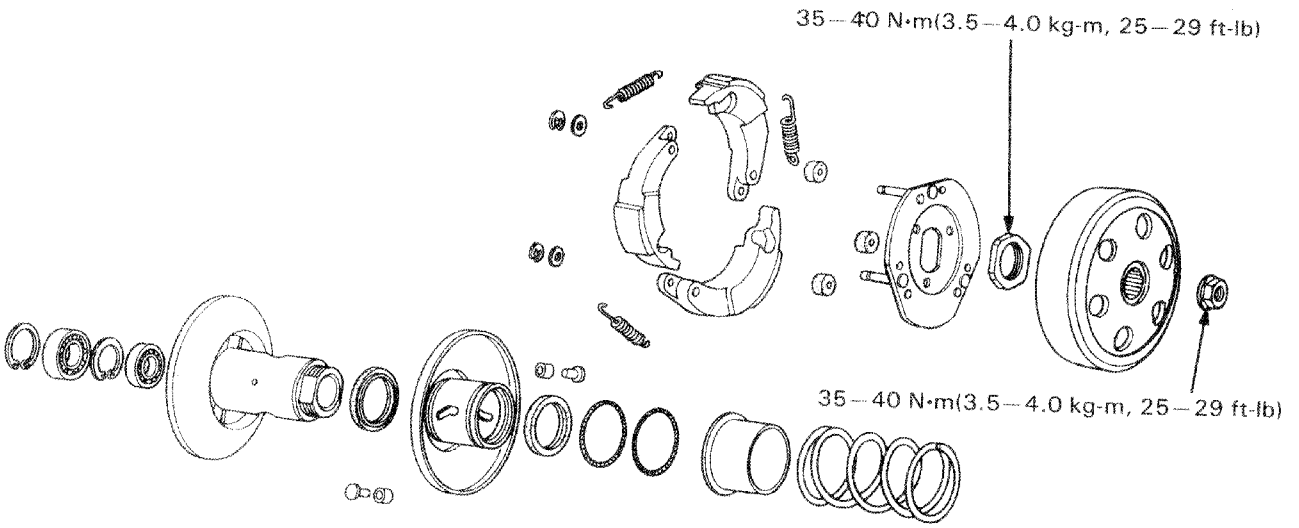

REMOVAL

Remove the left crankcase cover (page 8-3).
Remove the drive belt (page 8-3).
Hold the clutch outer with a universal holder and remove the 10 mm nut and clutch outer.

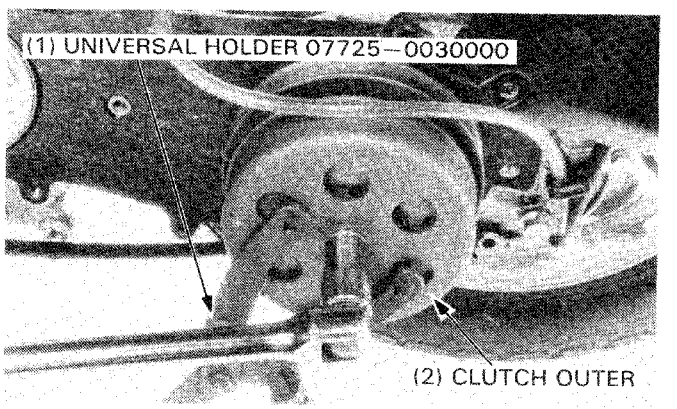

CLUTCH OUTER INSPECTION

Check the clutch outer for wear or damage.
Measure the clutch outer I.D.

SERVICE LIMIT: 112.5 mm (4.43 in)

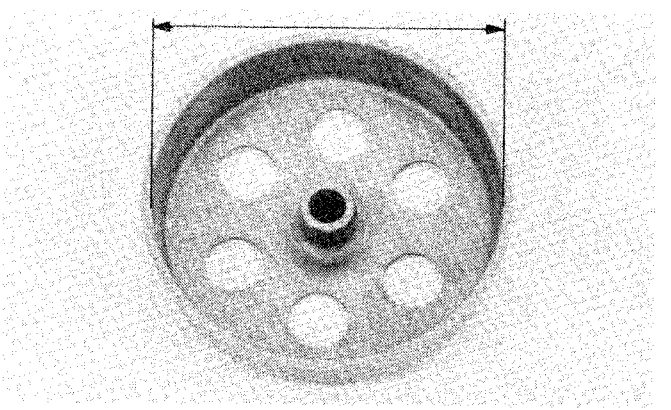

CLUTCH SHOE INSPECTION

Check the clutch shoe for wear or damage.
Measure the lining thickness.

SERVICE LIMIT: 2.0 mm (0.08 in)

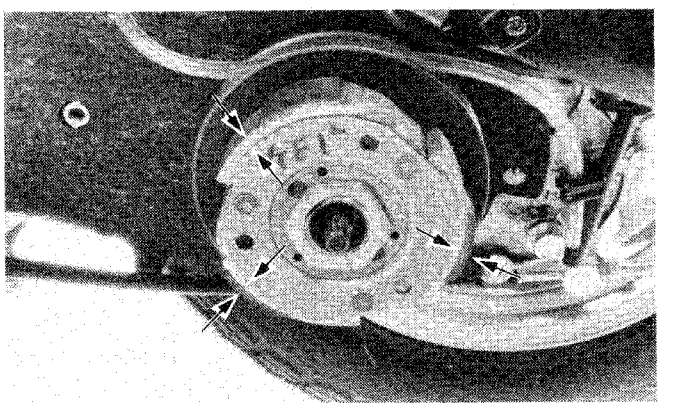

Remove the driven pulley.

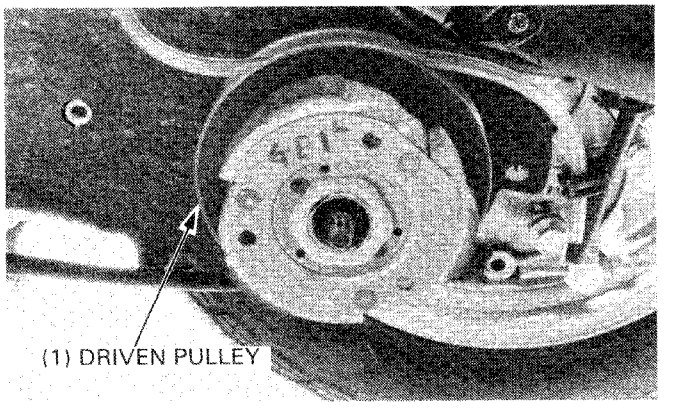

DRIVEN PULLEY DISASSEMBLY

Set the movable driven face assembly in the clutch spring compressor.

NOTE

- Do not compress the clutch spring compressor more than necessary as you may damage the drive plate.

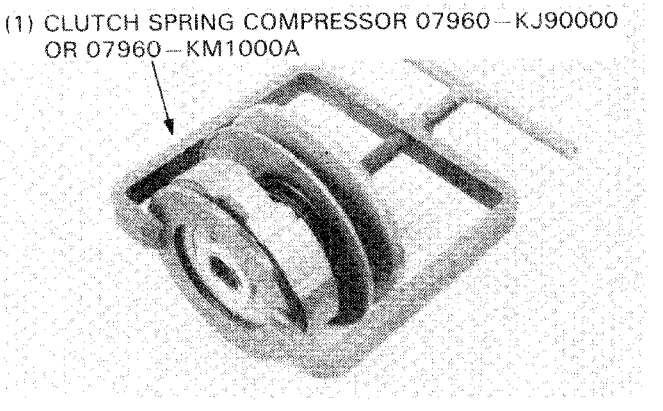

Remove the 28 mm lock nut with a lock nut wrench.
Loosen the clutch spring compressor and disassemble the clutch assembly and driven face spring.

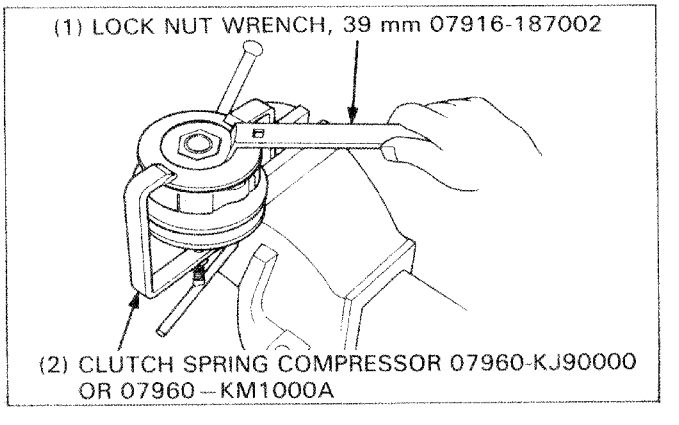

DRIVEN FACE SPRING INSPECTION

Measure the driven face spring free length.

SERVICE LIMIT: 86.3 mm (3.40 in)

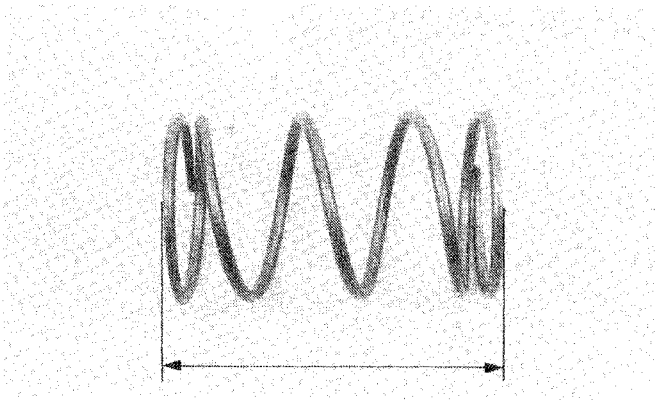

CLUTCH SHOE REPLACEMENT

Remove the snap ring and washer.

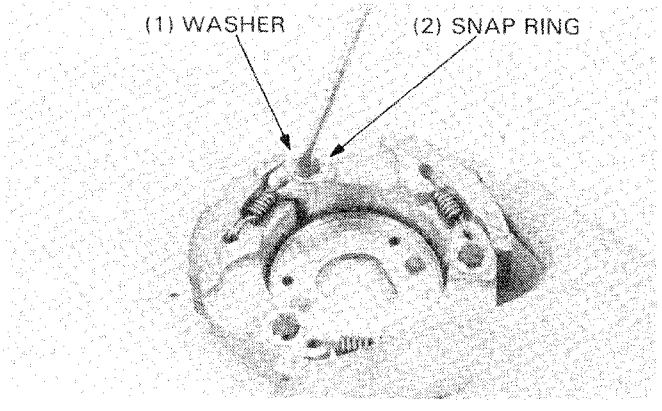

Remove the clutch weights and clutch springs from the drive plate.

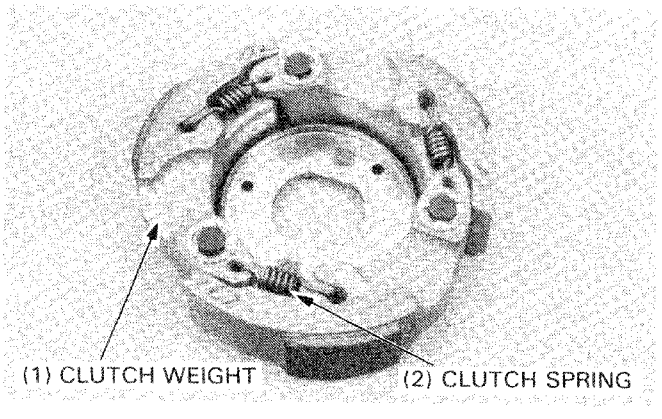

Inspect the damper rubbers for wear or damage. Replace them if necessary.
Set the clutch weight with clutch spring on the drive plate.

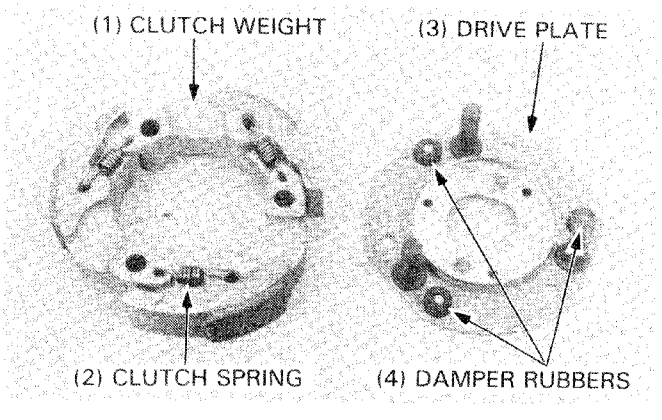

Install the washer and snap ring.

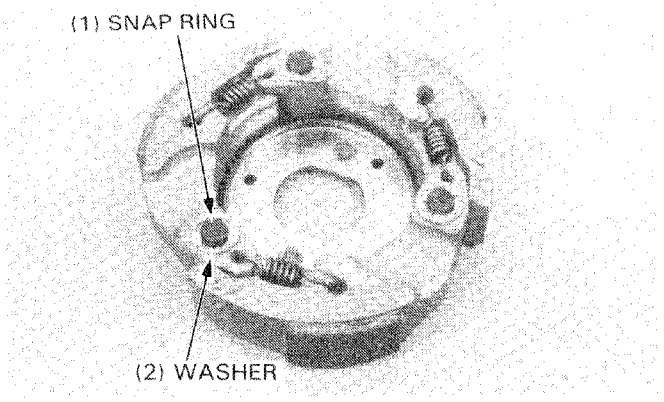

DRIVEN FACE DISASSEMBLY

Remove the seal collar by grasping the collar and twisting while pulling.

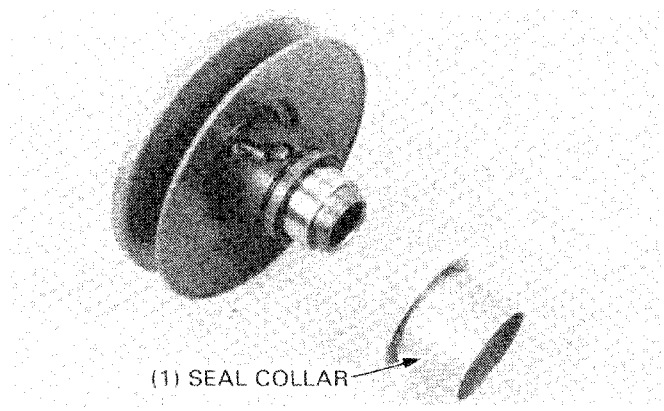

Pull out the guide roller pin and guide roller.
Remove the movable driven face from the driven face.

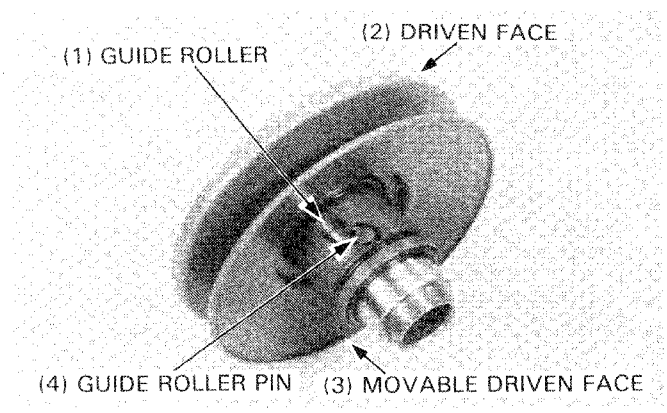

DRIVEN FACE/MOVABLE DRIVEN FACE INSPECTION

Check the driven face assembly for wear or damage.
Measure the driven face O.D.

SERVICE LIMIT: 33.93 mm (1.34 in)

Check the movable driven face for wear, scratches or scoring.
Measure the movable driven face I.D.

SERVICE LIMIT: 34.06 mm (1.341 in)

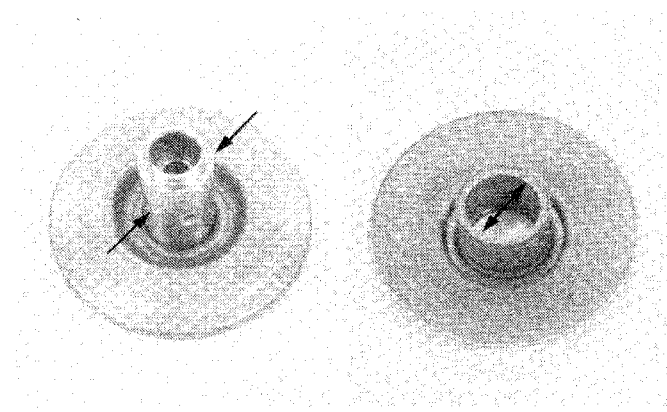

Check the movable driven face oil seal for wear or damage.
Replace if necessary.

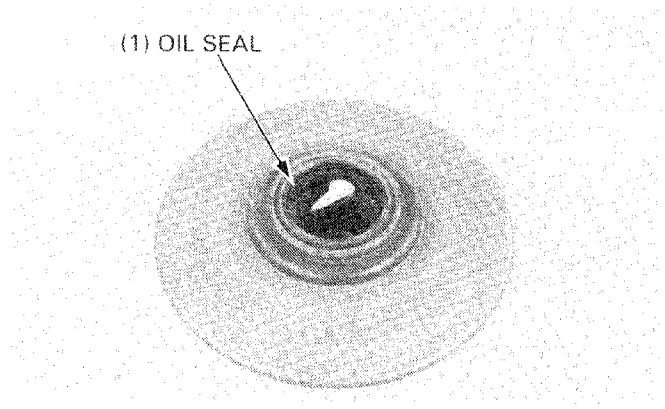

Check the driven face bearings for play or damage.
Replace if necessary.

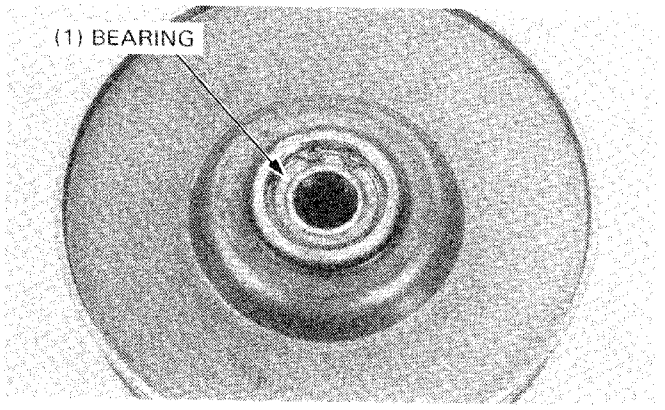

DRIVEN FACE BEARING REPLACEMENT

Remove the 28 mm snap ring and drive the inner bearing out.
Remove the 24 mm snap ring and drive the outer bearing out.

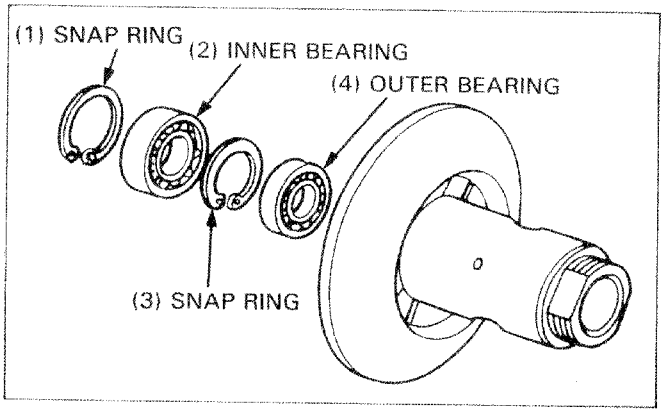

Pack a new outer bearing with grease and press it into the driven face.

NOTE

- Install it with the sealed end facing out.

Set the 24 mm snap ring in its groove.
Pack all bearing cavities with 5.0–5.5 g of grease.

NOTE

- Specified grease:
  Nippon Sekiyu LIPANOX DELUXE 3 or equivalent.

Apply grease to a new inner bearing and press it into the driven face.

NOTE

- Install it with the sealed end facing out.

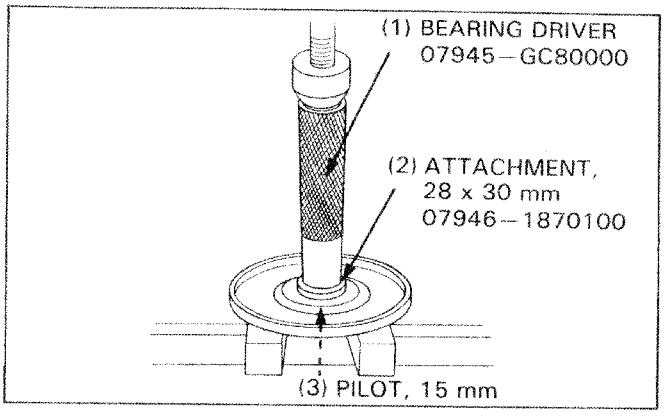

Install the 28 mm snap ring.

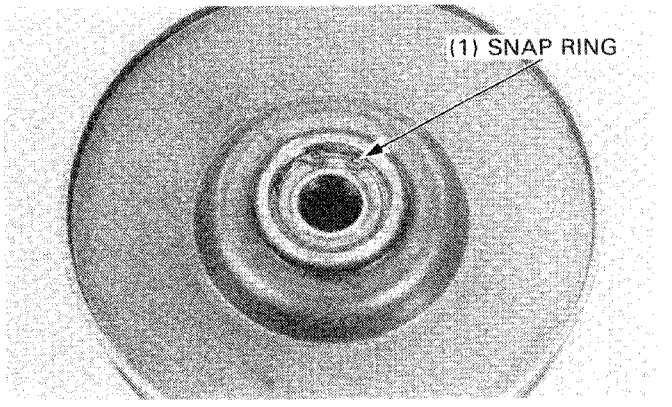

DRIVEN PULLEY ASSEMBLY

Apply grease to the inside of the movable driven face and install it onto the driven face.
Install the guide roller and guide roller pin.

Install a new O-rings.

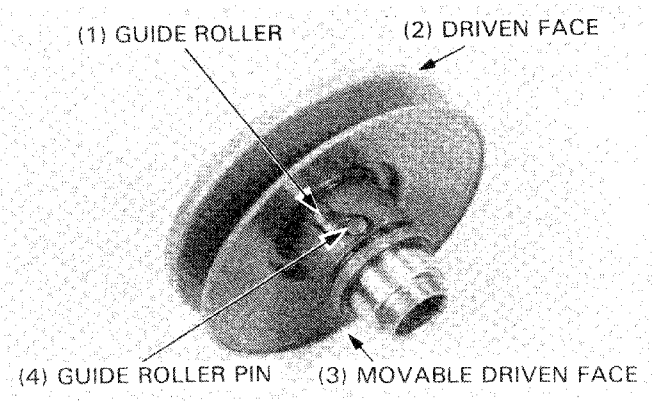

Apply grease to the O-rings and install the seal collar.

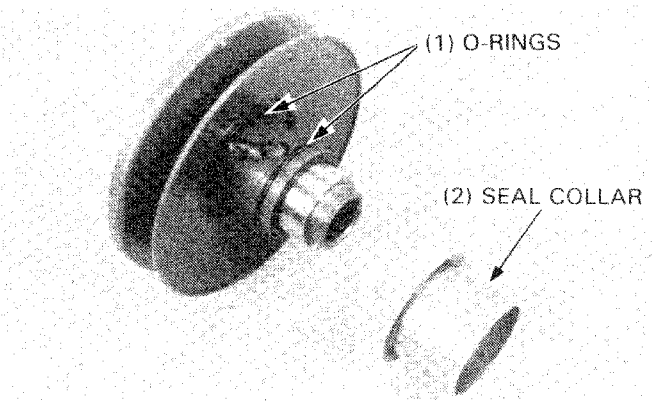

Install the driven face spring and clutch assembly on the driven pulley, then set them on the clutch spring compressor.

Compress the clutch spring compressor while aligning the cutout in the clutch drive plate with the cutout in the driven face shaft.

NOTE

- Do not overtighten the clutch spring compressor so as to the drive plate contacts the driven face shaft step.

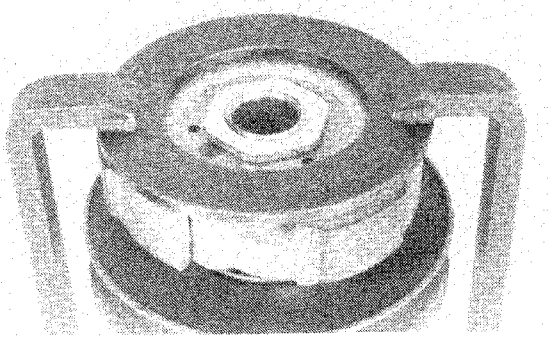

Tighten the 28 mm special nut with the lock nut wrench.

TORQUE: 35—40 N·m (3.5—4.0 kg-m, 25—29 ft-lb)

Remove the clutch spring compressor.

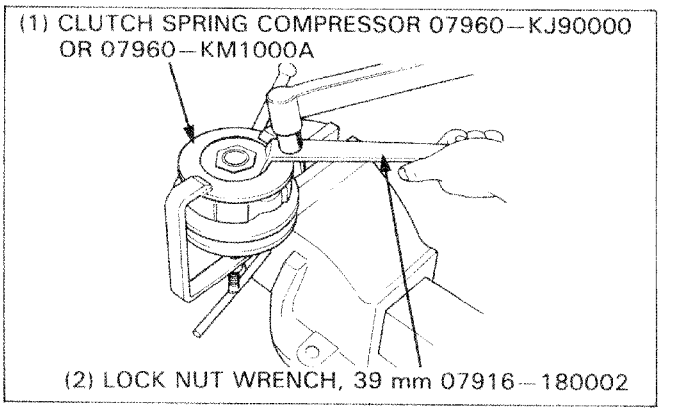

Install the driven pulley on the drive shaft.

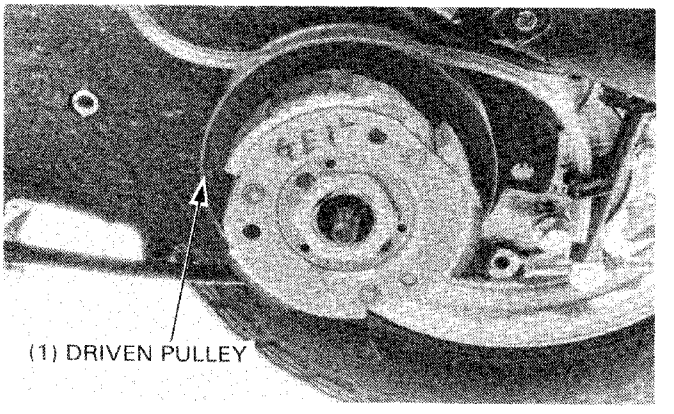

Install the clutch outer and tighten the 10 mm nut while holding the clutch outer with the universal holder.

TORQUE: 35—40 N·m (3.5—4.0 kg-m, 25—29 ft-lb)

Install the drive belt and left crankcase cover (page 8-3).

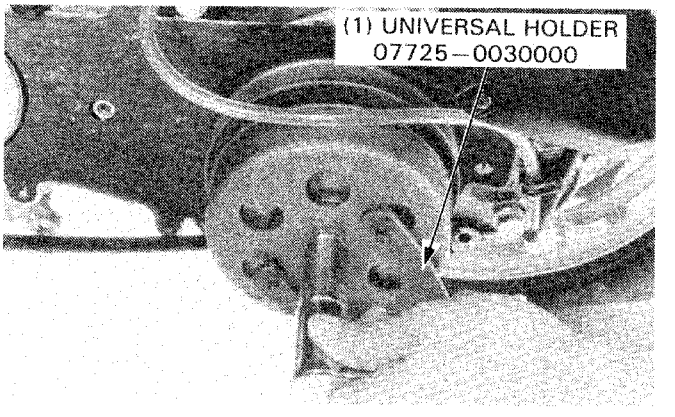

STARTER

STARTER GEAR REMOVAL

Remove the left crankcase cover (page 8-3).

Remove the following:
- drive belt (page 8-3).
- drive face (page 8-5).
- clutch outer (page 8-8).
- driven pulley (page 8-9).

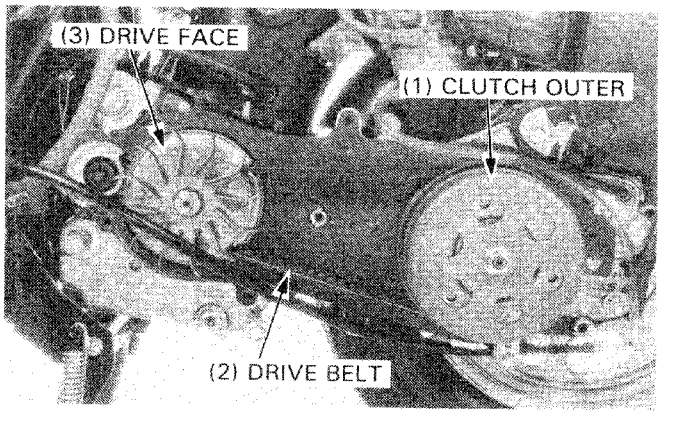

Remove the gasket and movable drive face.

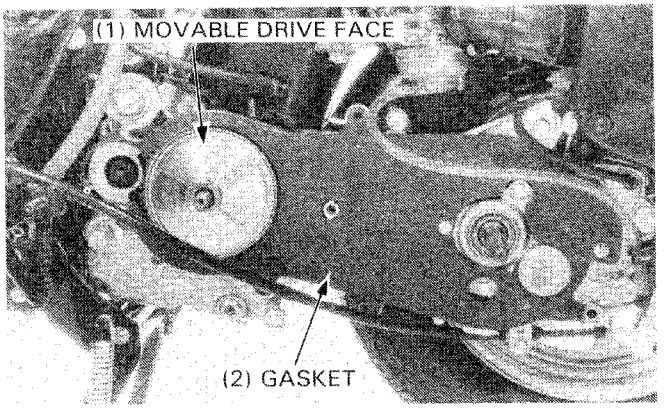

Remove the bearing holder.

WARNING

- *Do not rotate the starter motor with the left crankcase cover removed.*

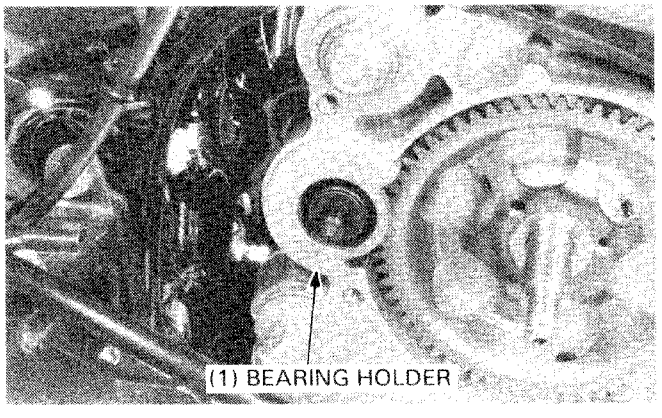

Screw the three 6 mm bolts into the flywheel puller and remove the starter gear using the flywheel puller.

NOTE

- When you remove the starter gear, tighten the shaft protector 07931—1870000 to protect the crankshaft threads.

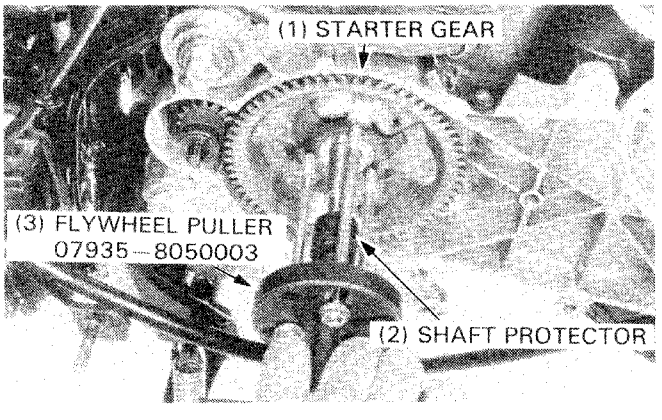

Remove the O-ring from the crankshaft.
Remove the starter pinion.

Check each part for wear or damage.
Replace if necessary.

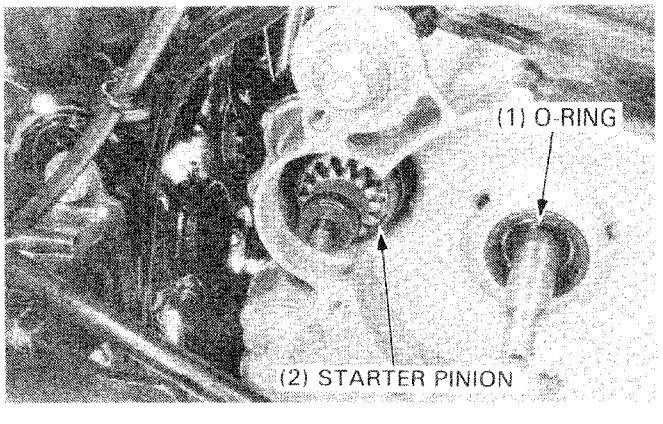

STARTER INSTALLATION

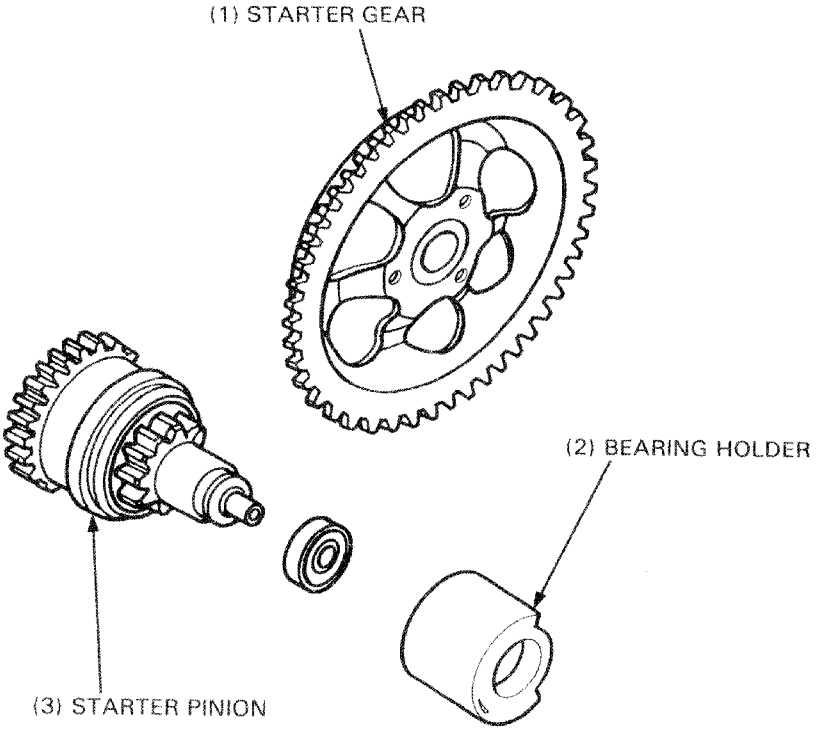

Install the starter pinion.
Apply grease to a new O-ring and install it in the crankshaft.

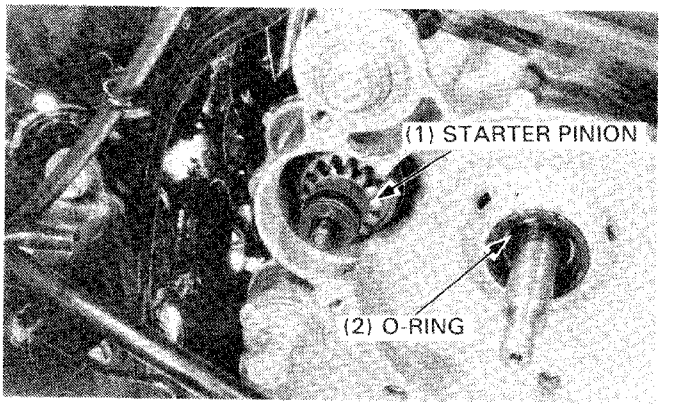

Install the starter gear.
Install the bearing holder.

NOTE

- Align the projection with the left crankcase groove.

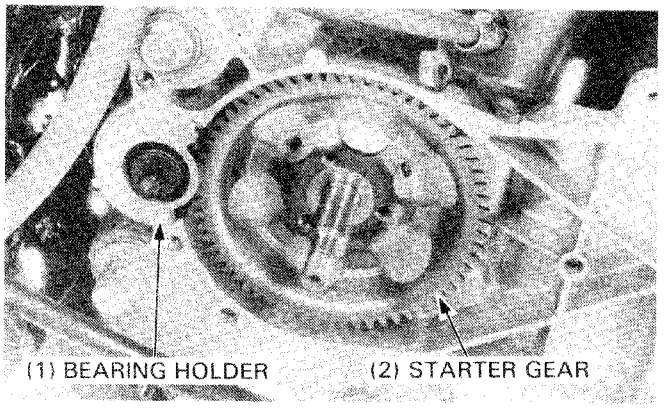

Install the movable drive face and new gasket.

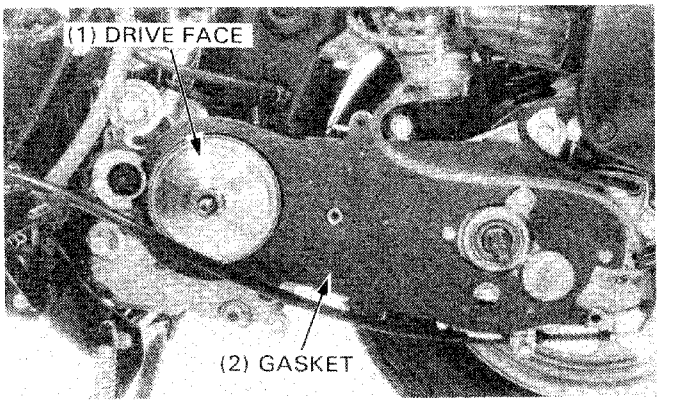

Install the following:
- driven pulley (page 8-7).
- clutch outer (page 8-14).
- drive face (page 8-7).
- drive belt (page 8-4).

Install the left crankcase cover.

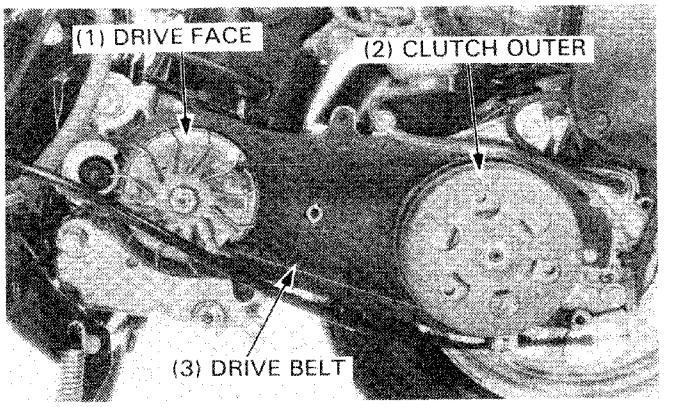

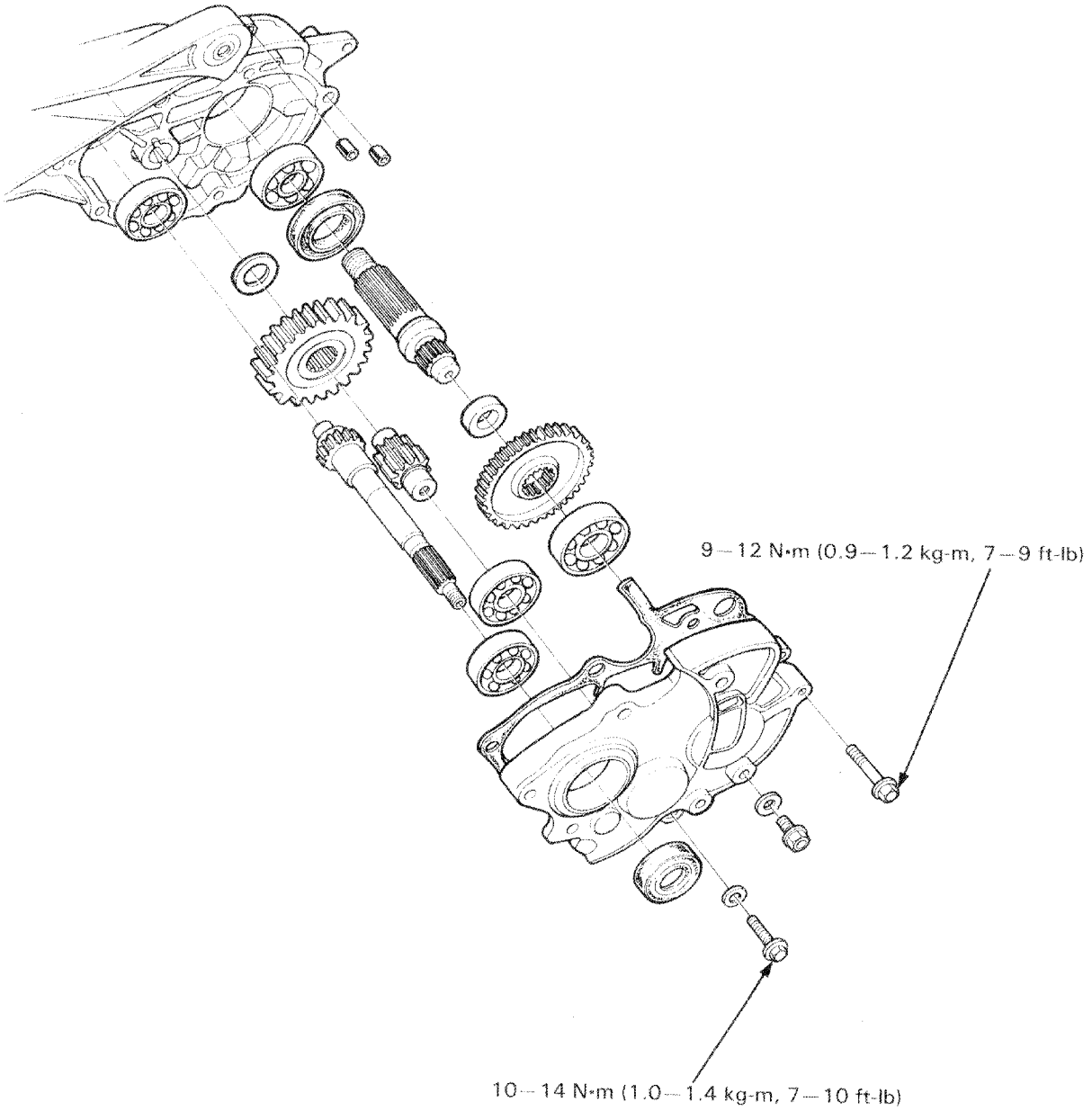
9—12 N•m (0.9—1.2 kg-m, 7—9 ft-lb)
10—14 N•m (1.0—1.4 kg-m, 7—10 ft-lb)

SERVICE INFORMATION	9-1	FINAL REDUCTION DISASSEMBLY	9-2
TROUBLESHOOTING	9-1	FINAL REDUCTION ASSEMBLY	9-6

SERVICE INFORMATION

SPECIFICATIONS

Specified oil: Honda 4-Stroke Oil, SAE IOW-30 or equivalent
Oil capacity: 60 cc (2 U.S. oz., 0.053 Imp qt.) at disassembly
52 cc (1.8 U.S. oz., 0.046 Imp qt.) at replacement

TORQUES

Rear axle nut	80—100 N·m (8.0—10.0 kg-m, 58—72 ft-lb)
Clutch outer	35—40 N·m (3.5—4.0 kg-m, 22—29 ft-lb)
Final gear case bolt	9—12 N·m (0.9—1.2 kg-m, 7—9 ft-lb)
Transmission oil drain bolt	10—14 N·m (1.0—1.4 kg-m, 7—10 ft-lb)

TOOLS

Special

Assembly collar	07965—1480100
Assembly bolt	07965—1480200
Attachment, 28 x 30 mm	07946—1870100

Common

Attachment, 32 x 35 mm	07746—0010100
Attachment, 37 x 40 mm	07746—0010200
Attachment, 42 x 47 mm	07746—0010300
Pilot, 17 mm	07746—0040400
Pilot, 12 mm	07746—0040200
Pilot, 20 mm	07746—0040500
Driver	07749—0010000

TROUBLESHOOTING

Engine starts but scooter won't move
- Damaged transmission
- Seized transmission

Abnormal noise
- Worn, seized or chipped gears
- Worn bearing

Oil leaks
- Oil level too high
- Worn or damaged oil seal

FINAL REDUCTION DISASSEMBLY

Remove the following:
— left crankcase cover (page 8-3).
— driven pulley (page 8-8).

Remove the oil level check bolt and drain bolt to drain the transmission oil.
Disconnect the breather tube from the air cleaner case.
Remove the bolts and cover.

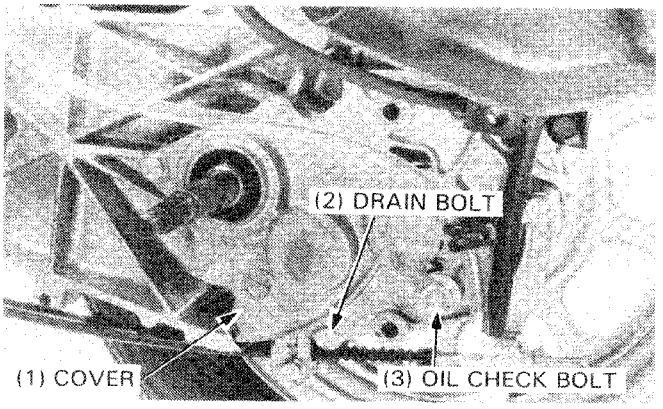

Remove the gasket and dowel pins.

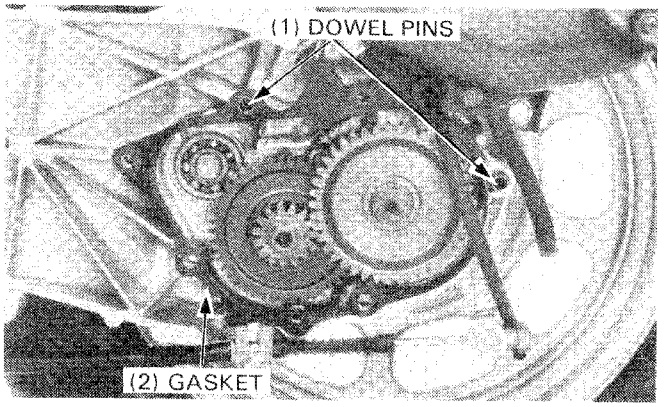

Remove the final gear.

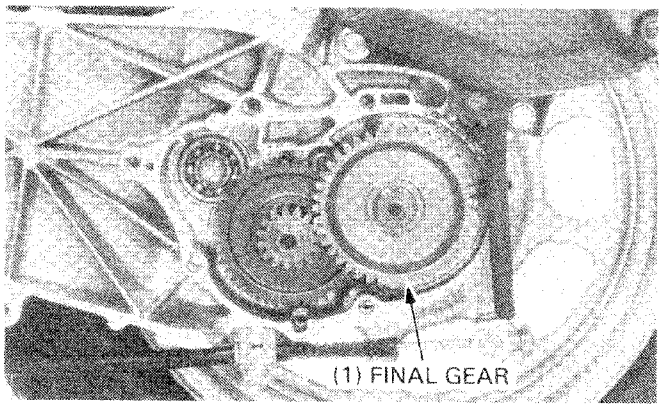

Remove the final shaft collar.
Remove the countershaft and gear assembly.

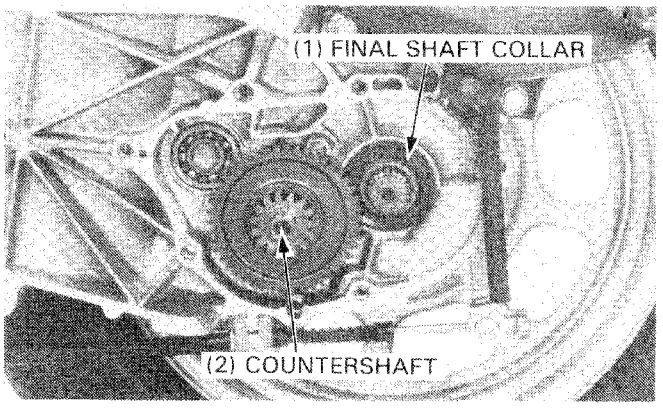

Remove the rear wheel.
Remove the final shaft.

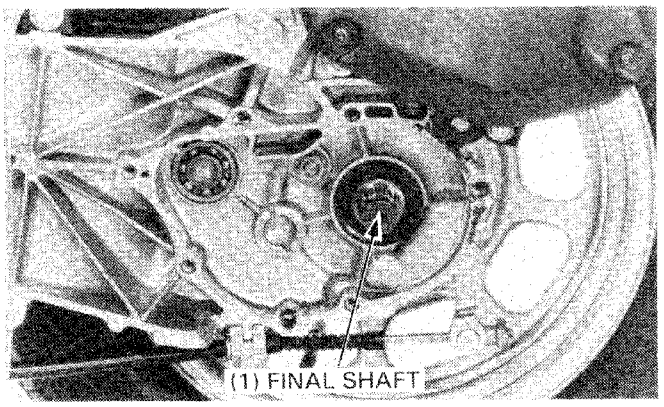

Remove the drive shaft from the gear case cover.

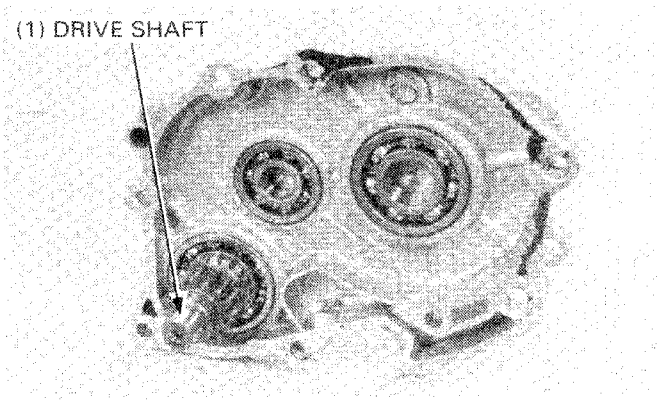

INSPECTION

Inspect the drive shaft and gear for wear or damage.

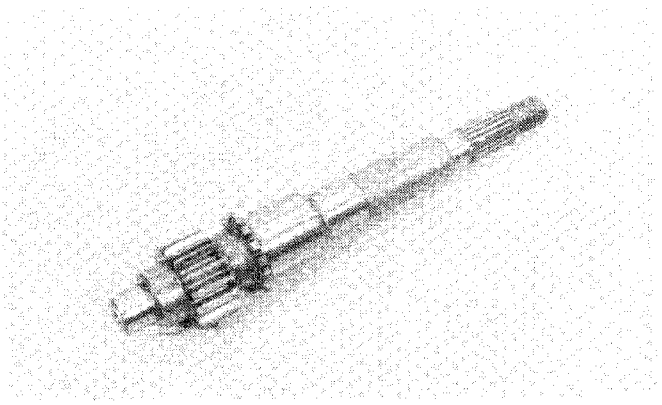

Inspect the countershaft and gear for wear or damage.

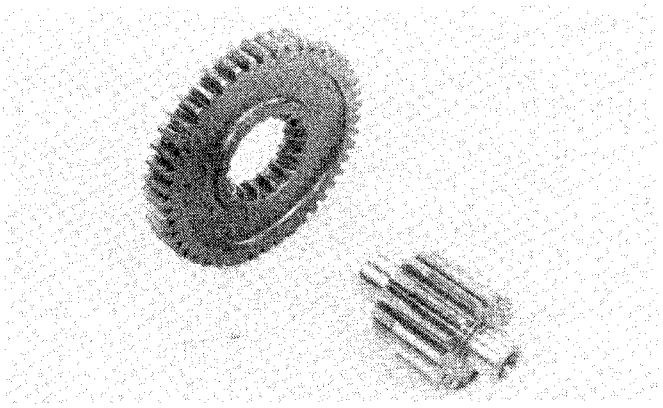

Inspect the final gear and shaft for wear or damage.

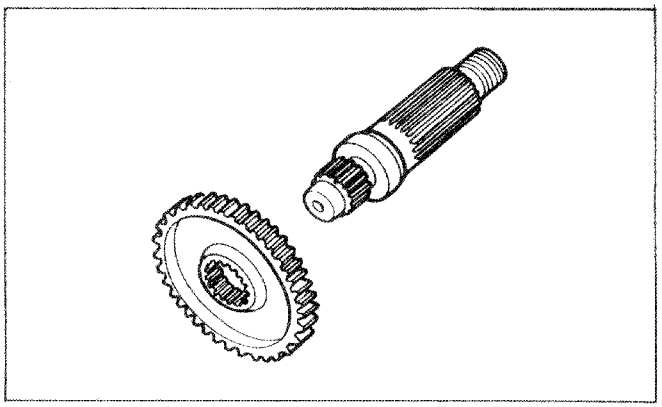

Inspect the drive and final shaft bearings and oil seal for wear or damage.

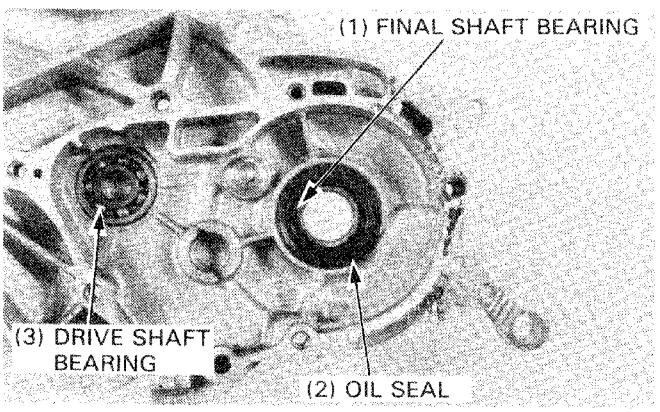

Inspect the gear case cover bearings and oil seal for wear or damage.

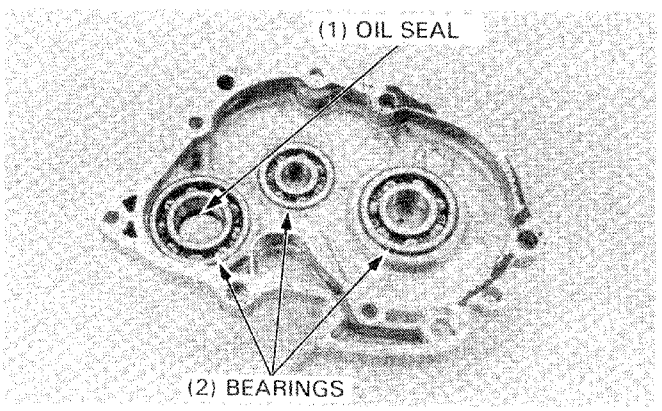

GEAR CASE COVER BEARING REPLACEMENT

Remove the oil seal and drive the drive shaft bearing out of the oil seal side.

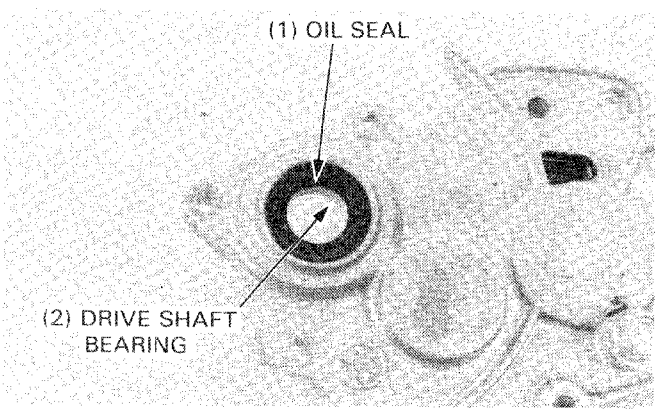

Remove the counter and final shaft bearings from the gear case cover.

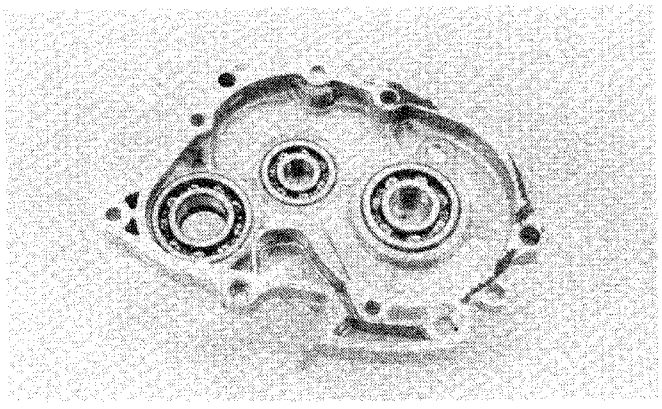

Install new bearings in the gear case cover with the driver, attachment and pilot.
Use the following tools to install the bearings.

NOTE

- Drive in the bearings with marks facing up.

Drive Shaft Bearing:

Driver:	**07749–0010000**
Attachment, 42 x 47 mm:	**07746–0010300**
Pilot, 20 mm:	**07746–0040500**

Countershaft Bearing:

Driver:	**07749–0010000**
Attachment, 28 x 30 mm:	**07946–1870100**
Pilot, 12 mm:	**07746–0040200**

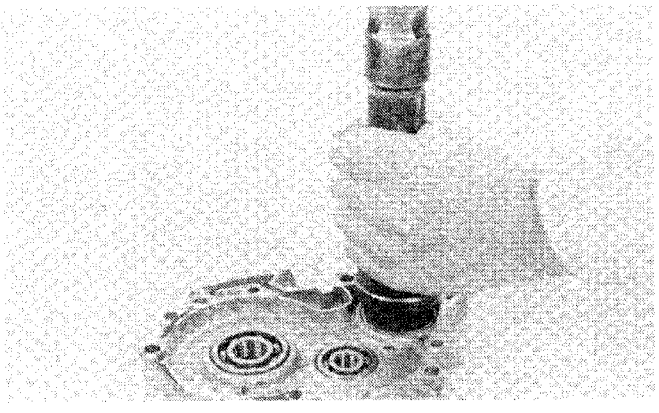

LEFT CRANKCASE BEARING REPLACEMENT

Remove the oil seal.
Drive the final shaft bearing out.

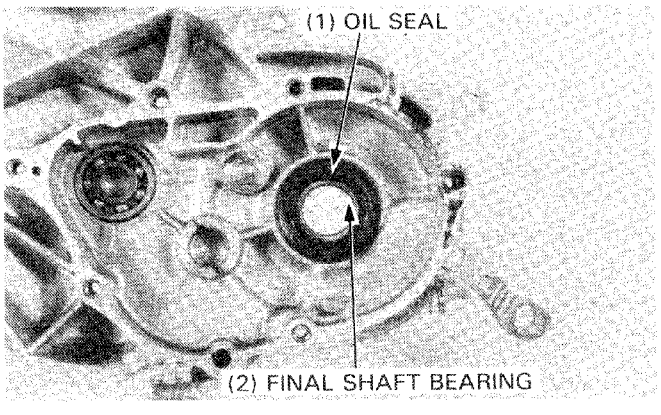

Remove the drive shaft bearing from the right crankcase.

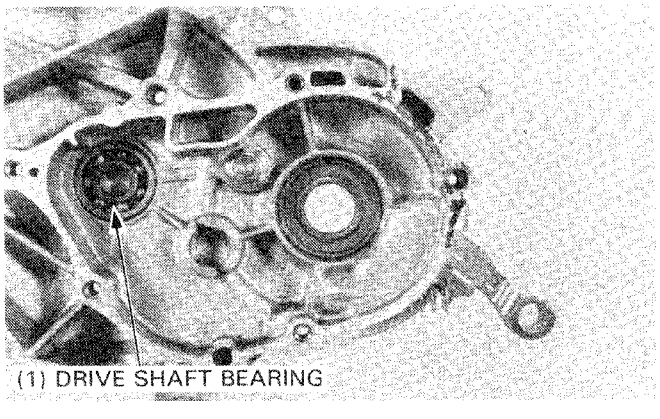

Install a new bearing in the left crankcase with the driver, attachment and pilot.

Final Shaft Bearing:

Driver:	07749—0010000
Attachment, 37 x 40 mm:	07746—0010200
Pilot, 20 mm:	07746—0040500

Drive Shaft Bearing:

Driver:	07749—0010000
Attachment, 32 x 35 mm:	07746—0010100
Pilot, 12 mm:	07746—0040200

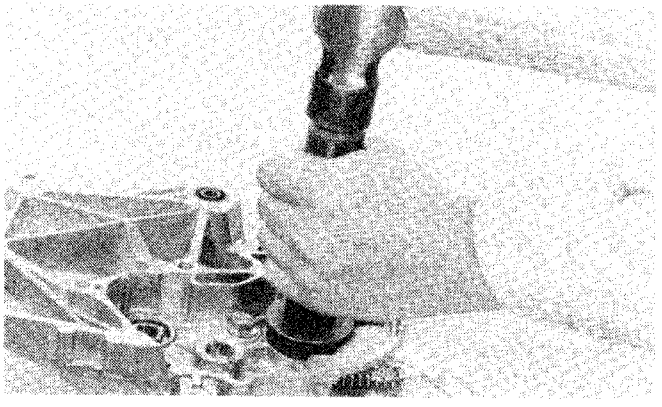

Install a new oil seal.

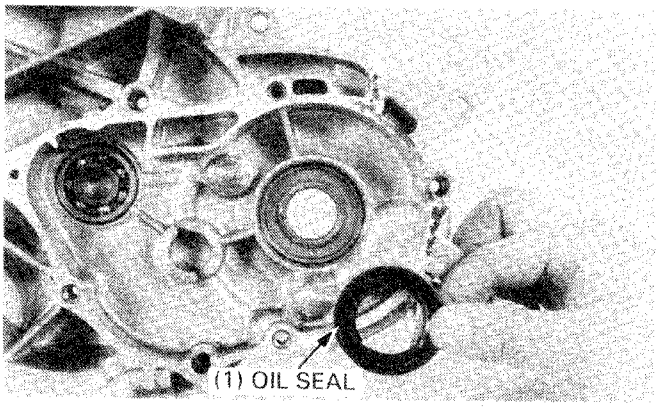

FINAL REDUCTION ASSEMBLY

Install the drive shaft into the transmission cover using special tools.
Assembly Bolt: 07965—1480200
Assembly Collar: 07965—1480100
Connect the breather tube.

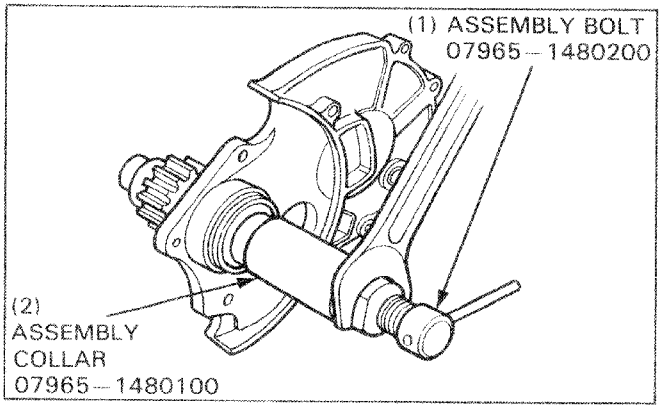

Install the final shaft in the left crankcase.
Install the rear wheel.

Install the thrust washer into the countershaft and then install the countershaft.

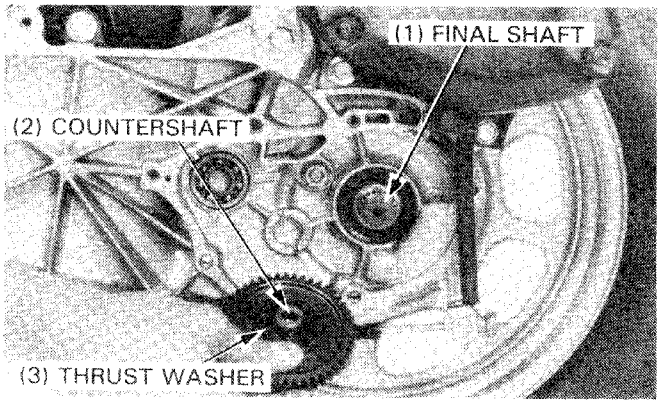

Install the final shaft collar onto the final shaft.

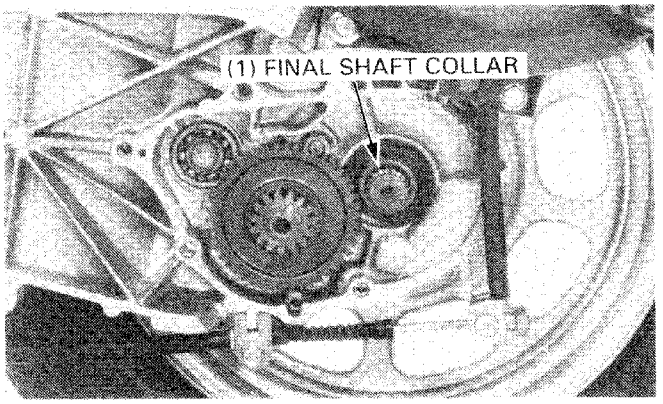

Install the final gear.

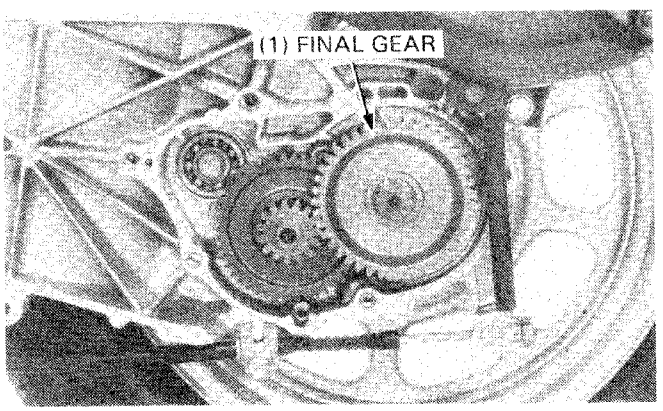

Install the dowel pins and a new gasket.

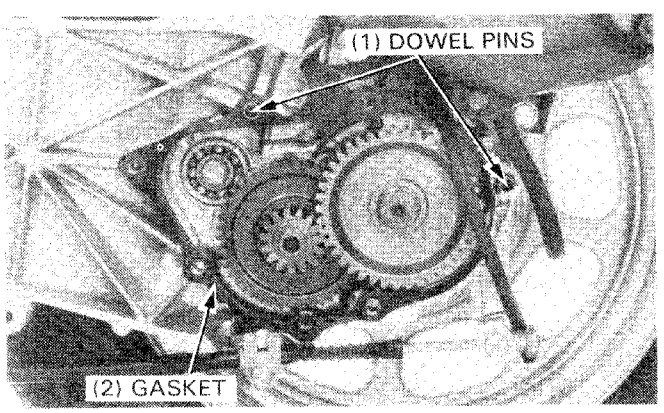

Install the gear case cover.
Set the breather tube in the air cleaner case.

Fill the final reduction case with the specified oil (page 2-1).
Install the driven pulley (page 8-4).
Install the drive belt and left crankcase cover (page 8-3).

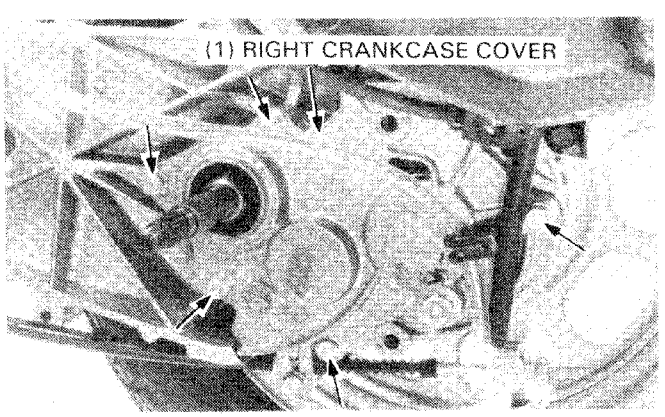

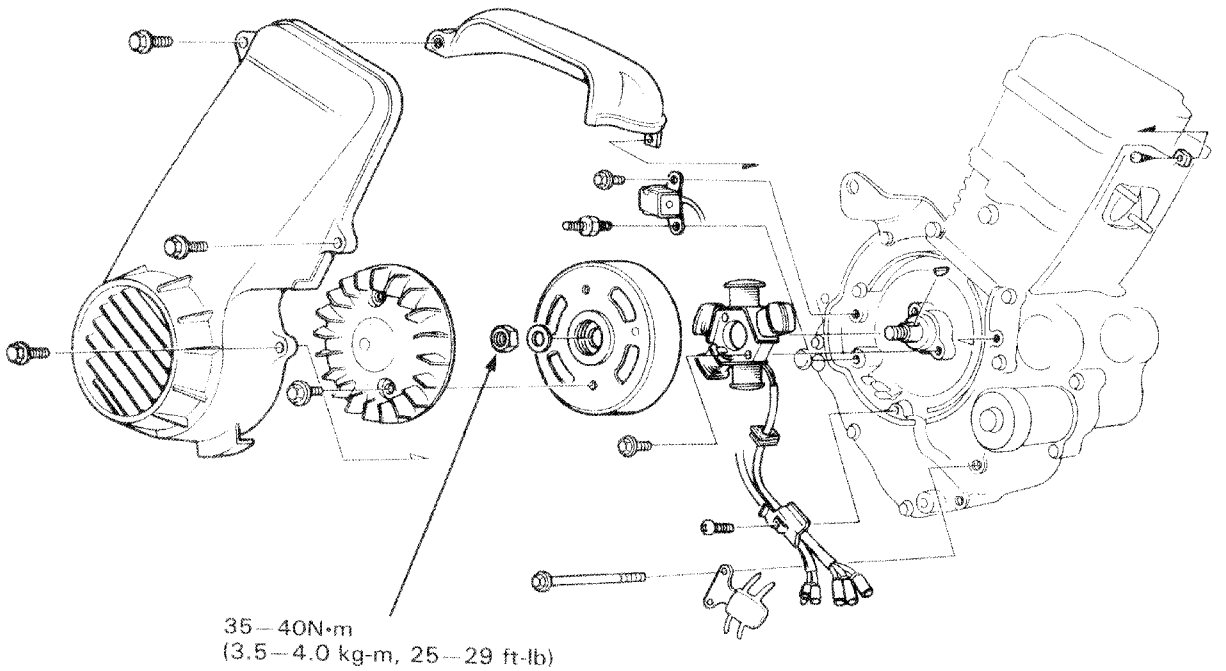
35—40N•m
(3.5—4.0 kg-m, 25—29 ft-lb)

SERVICE INFORMATION	10-1	ALTERNATOR INSTALLATION	10-3
ALTERNATOR REMOVAL	10-2		

SERVICE INFORMATION

GENERAL

- Alternator can be serviced without removing the engine from the frame.
- Refer to section 17 for troubleshooting and inspection of the alternator.

TORQUE VALUE

Flywheel	35—40 N·m (3.5—4.0 kg-m, 25—29 ft-lb)

TOOLS

Common

Universal holder	07725—0030000
Flywheel puller	07733—0010000

ALTERNATOR REMOVAL

Remove the right side cover (page 12-2).
Remove the muffler and right side rail.
Remove the bolt and fan cover.
Disconnect the alternator wire.

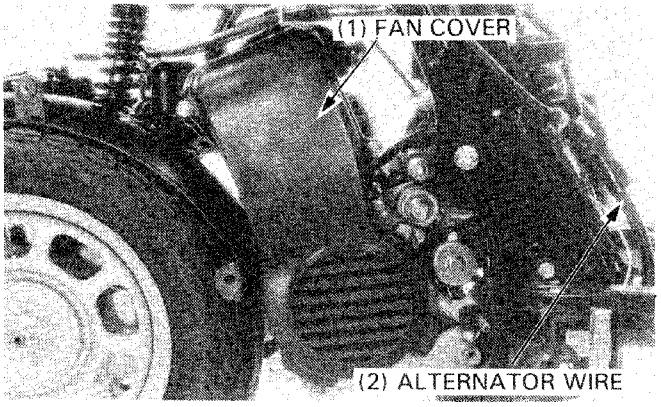

Remove the bolts and cooling fan.

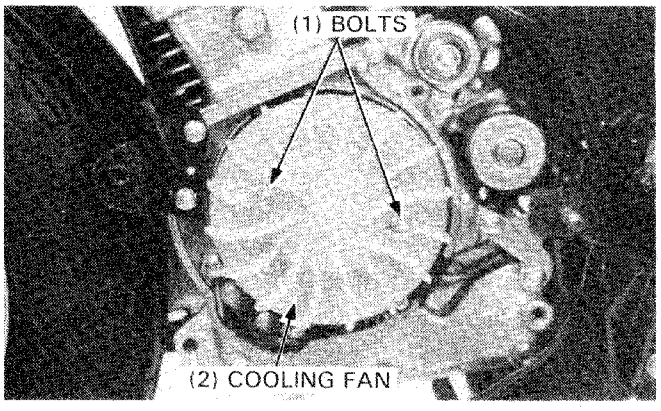

Hold the flywheel with a universal holder and remove the nut.

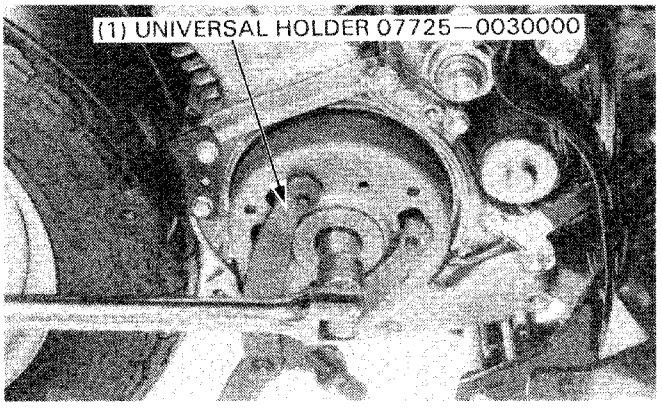

Remove the flywheel with a flywheel puller.
Remove the woodruff key from the crankshaft.

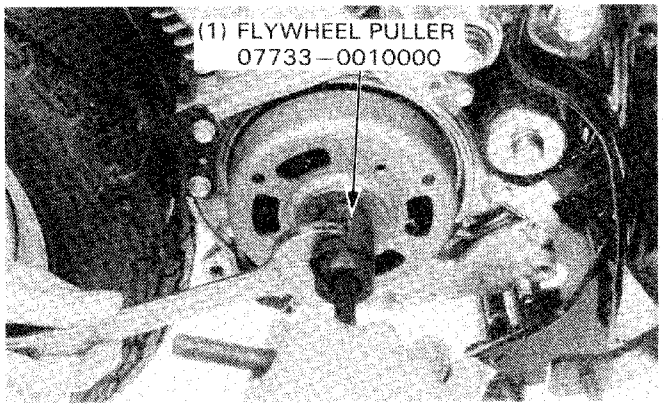

Remove the screws and wire clamps.
Remove the bolts, stator coil and ignition pulse generator.

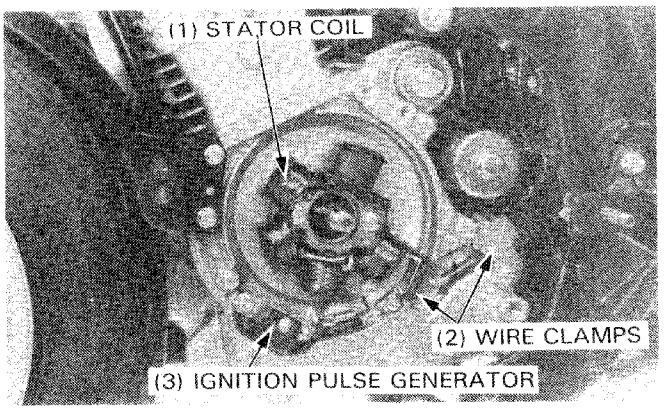

ALTERNATOR INSTALLATION

Install the stator coil and ignition pulse generator.
Route each wire as shown and secure it with the wire clamps.

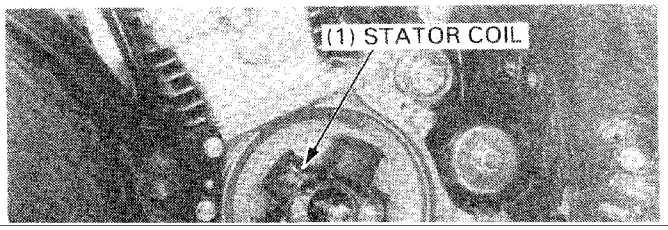

Install the cooling fan.

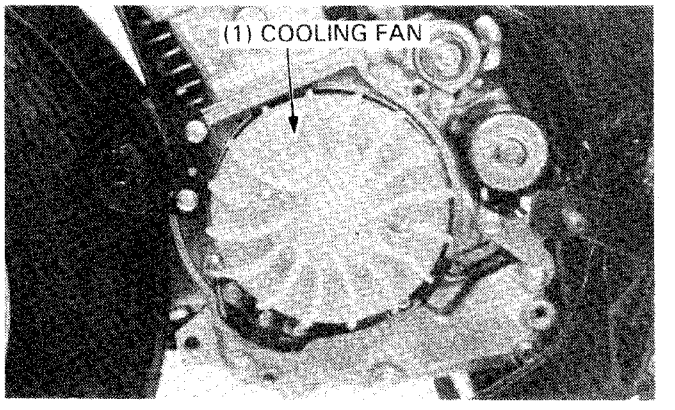

Align the fan cover groove with the shroud and tighten the bolts.
Connect the alternator wire.
Install the muffler and right side rail.
Install the right side cover (page 12-4).

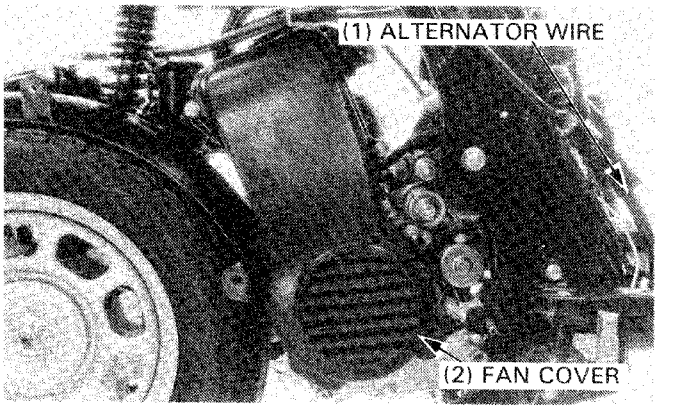

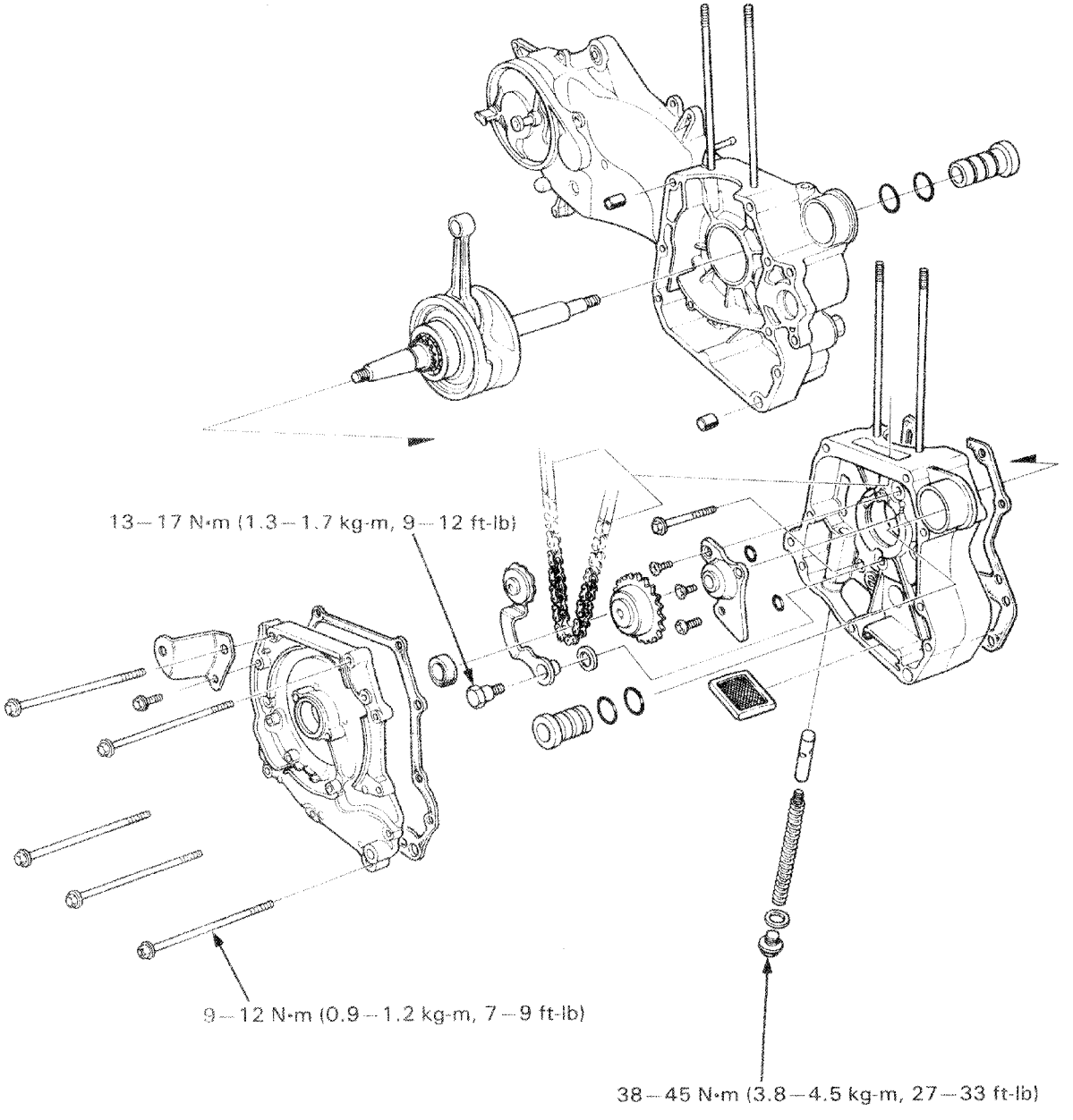
13—17 N•m (1.3—1.7 kg-m, 9—12 ft-lb)
9—12 N•m (0.9—1.2 kg-m, 7—9 ft-lb)
38—45 N•m (3.8—4.5 kg-m, 27—33 ft-lb)

11. CRANKCASE/CRANKSHAFT

SERVICE INFORMATION	11-1	CRANKSHAFT	11-4
TROUBLESHOOTING	11-1	CRANKCASE ASSEMBLY	11-5
CRANKCASE SEPARATION	11-2		

SERVICE INFORMATION

GENERAL

- This section covers crankcase separation to service the crankshaft.
- The following parts must be removed before separating the crankcase.

Engine	Section 5
Cylinder head	Section 6
Cylinder/piston	Section 7
Drive and driven pulleys and starter	Section 8
Final reduction	Section 9
Alternator	Section 10
Starter motor	Section 15

- If the crankshaft bearings, oil pump driven sprocket or timing sprocket need replacement, the crankshaft assembly must be replaced.

SPECIFICATIONS

ITEMS		STANDARD	SERVICE LIMIT
CRANKSHAFT	Connecting rod small end I.D.	13.016—13.034 mm (0.5124—0.5131 in)	13.10 mm (0.52 in)
	Connecting rod big end side clearance	0.10—0.04 mm (0.004—0.016 in)	0.6 mm (0.02 in)
	Connecting rod big end radial clearance	0—0.012 mm (0—0.0005 in)	0.05 mm (0.002 in)
	Crankshaft runout	———	0.10 mm (0.004 in)
CAM CHAIN TENSIONER	Tensioner spring free length	111.7 mm (4.40 in)	104.4 mm (4.11 in)
	Tensioner rod O.D.	11.985—12.000 mm (0.4718—0.4724 in)	11.94 mm (0.470 in)

TORQUE VALUES

Cam chain tensioner sealing bolt	38—45 N·m (3.8—4.5 kg-m, 27—33 ft-lb)
Cam chain tensioner bolt	13—17 N·m (1.3—1.7 kg-m, 9—12 ft-lb)
Crankcase bolt	9—12 N·m (0.9—1.2 kg-m, 7—9 ft-lb)

TROUBLESHOOTING

Excessive engine noise
- Excessive bearing play
- Excessive crank pin bearing play
- Worn piston pin and piston pin hole

Excessive cam chain slack
- Weak or damaged tensioner spring
- Improper tensioner rod operation
- Clogged one-way valve

Excessive cam chain noise
- Damaged cam chain tensioner
- Damaged one-way valve
- Weak or damaged tensioner spring

CRANKCASE SEPARATION

Remove the bolts and right crankcase cover.

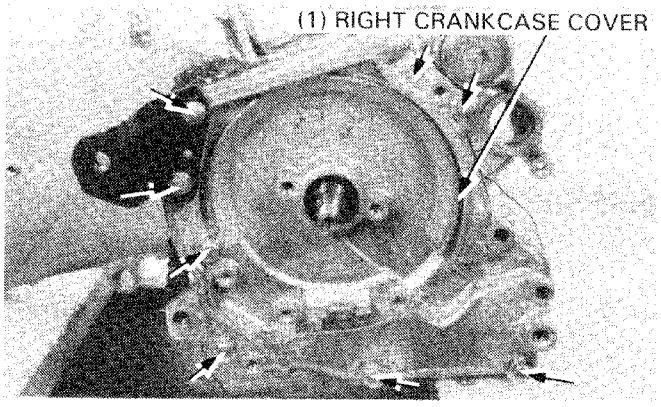

Remove the gasket and dowel pins.

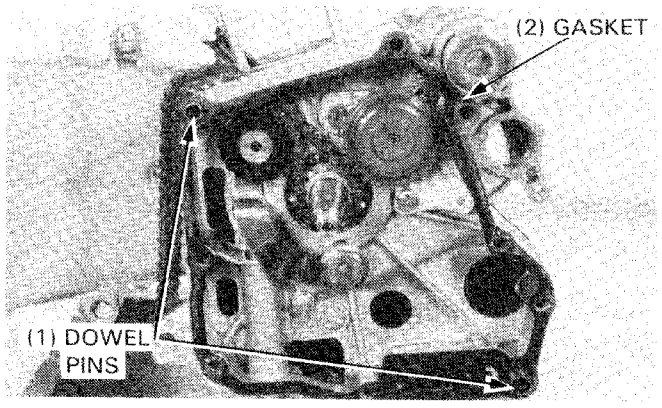

Remove the oil pump.

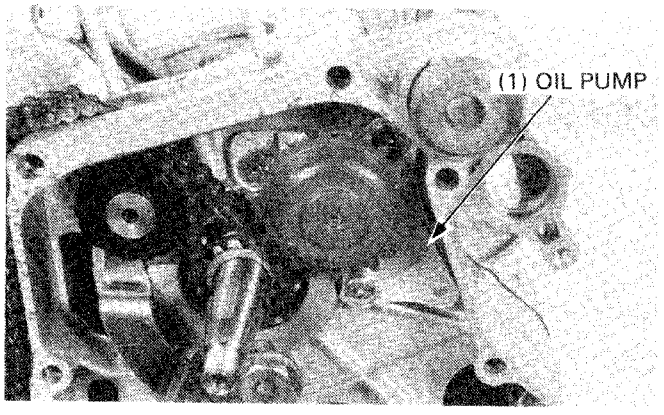

Remove the cam chain tensioner.
Remove the cam chain.
Remove the O-rings.

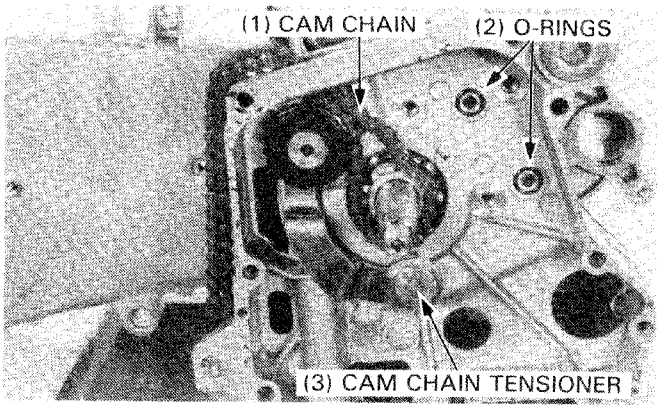

CAM CHAIN TENSIONER INSPECTION

Check the cam chain tensioner arm and tensioner roller for wear, damage or deformation.

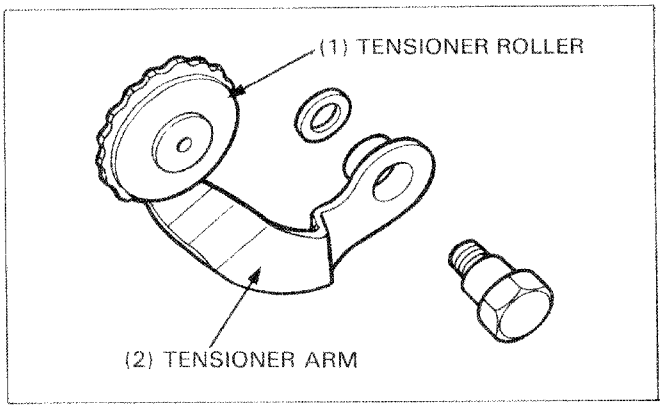

Measure the tensioner spring free length.

SERVICE LIMIT: 104.4 mm (4.11 in)

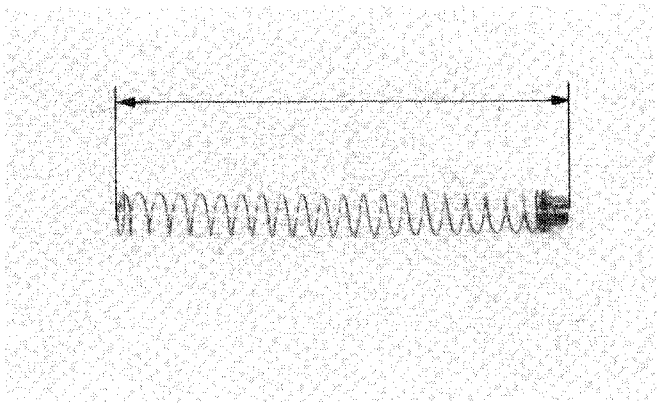

NOTE

- Small scores or scratches may be removed by working the surface with an oil stone.

Check the rod surface for scores or scratches.
Measure the rod O.D.

SERVICE LIMIT: 11.94 mm (0.470 in)

Make sure that the tensioner rod valve is not clogged.

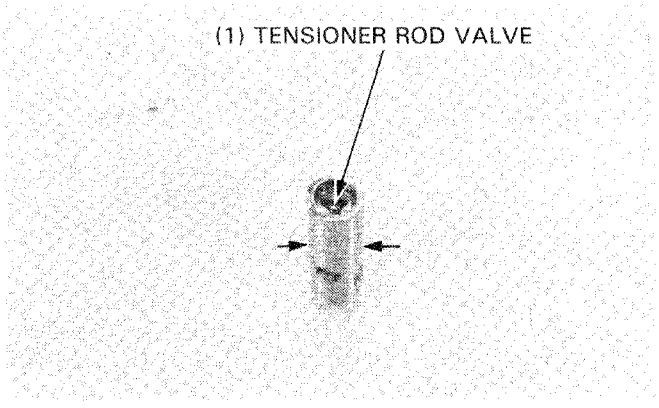

Remove the bolt and right crankcase.
Remove the gasket and dowel pins.

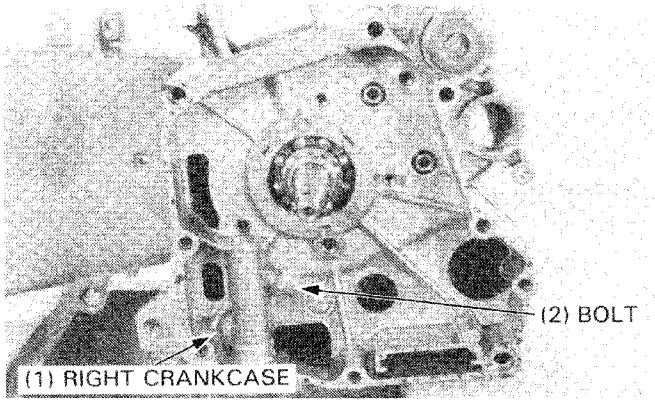

CRANKSHAFT

REMOVAL

Separate the crankcase halves and remove the crankshaft.

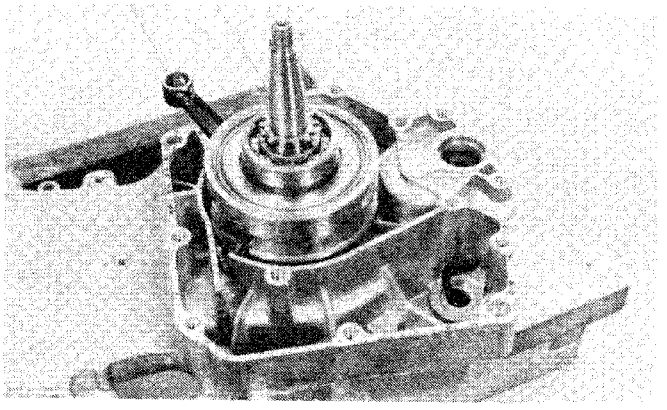

INSPECTION

Measure the connecting rod big end side clearance with a feeler gauge.

SERVICE LIMIT: 0.6mm (0.02 in)

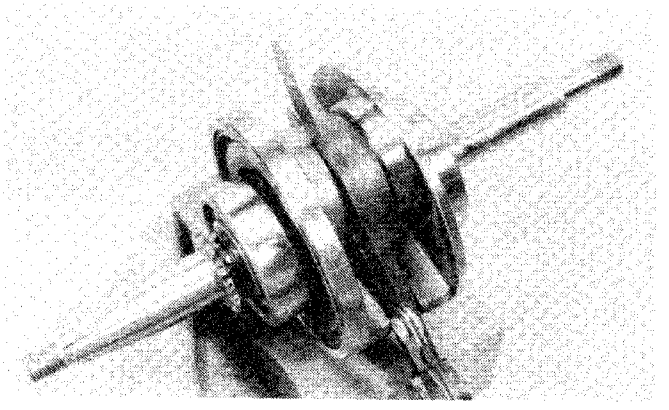

Measure the connecting rod big end radial clearance at two points in the X and Y directions.

SERVICE LIMIT: 0.05 mm (0.002 in)

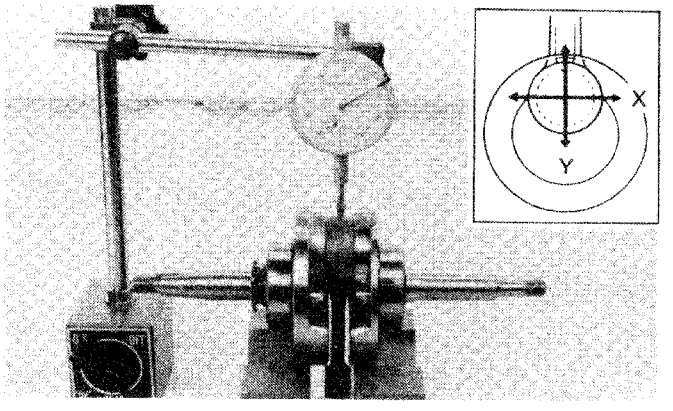

Set the crankshaft on a stand or in V blocks and read runout at the points shown, using a dial gauge.

SERVICE LIMIT: 0.10 mm (0.004 in)

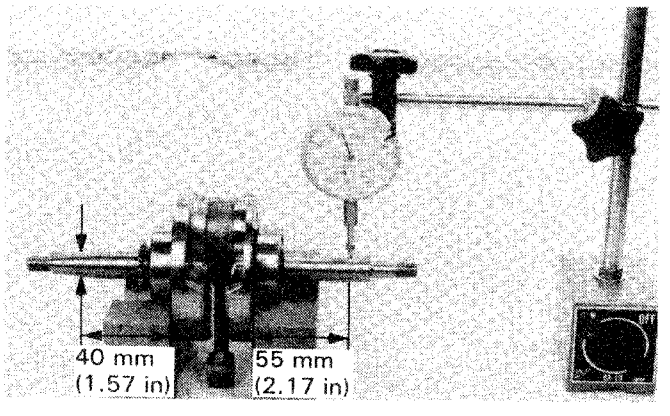

BEARING INSPECTION

Turn the bearings with your finger. The bearings should turn smoothly and quietly. Also check that the outer race fits tightly in the crankshaft.
Remove and discard the bearings if the races do not turn smoothly, quietly, or if they fit loosely in the crankshaft.

NOTE

- Replace the bearings in pairs.

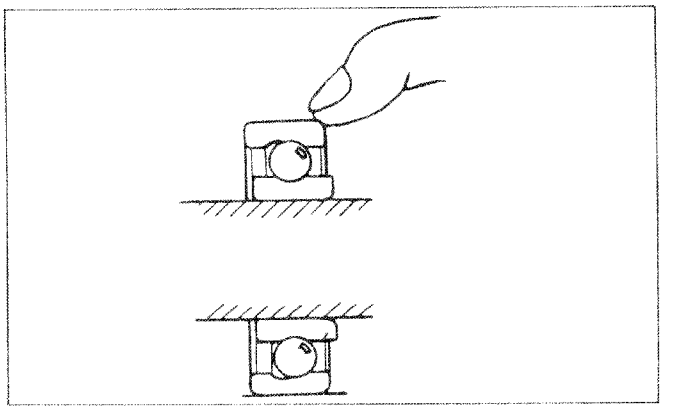

CRANKCASE ASSEMBLY

Remove all gasket materials from the crankcase mating surfaces, being careful not to damage the mating surfaces.

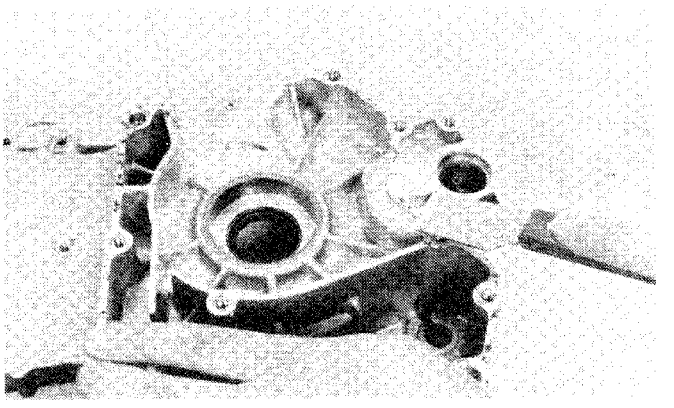

Install the crankshaft into the left crankcase.
Install the dowel pins and a new gasket.

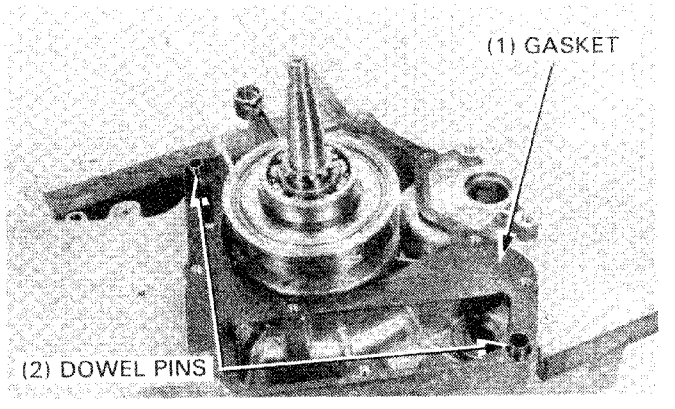

Install the right crankcase and bolt.

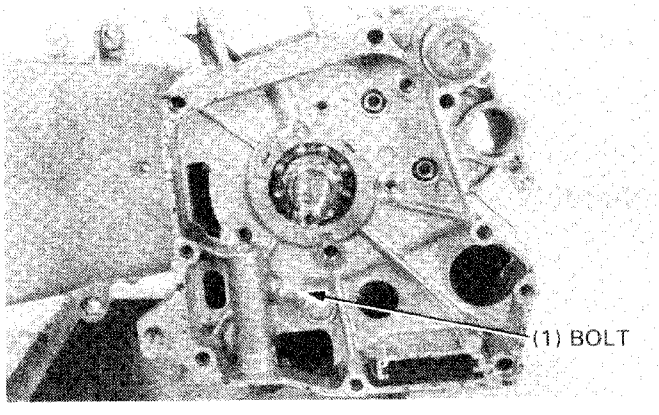

Install the cam chain and cam chain tensioner.

TORQUE: 13—17 N·m (1.3—1.7 kg-m, 9—12 ft-lb)

Install new O-rings.

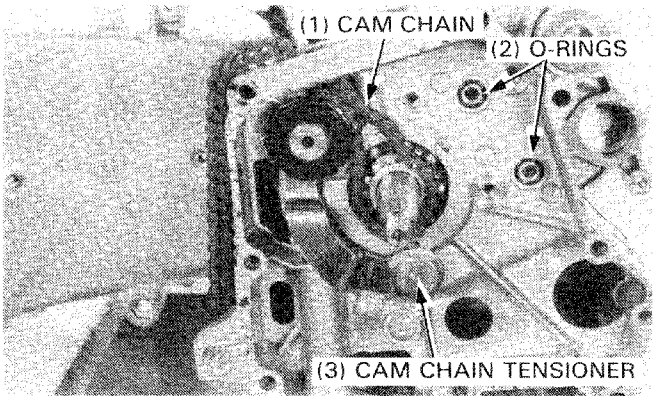

Install the oil pump.

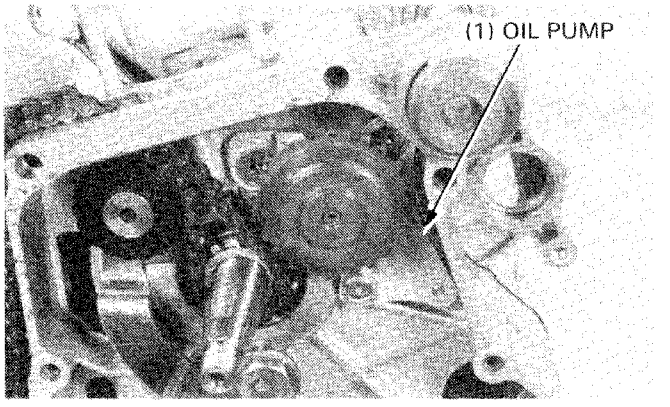

Install the dowel pins and a new gasket.
Clean the oil filter screen and install it.

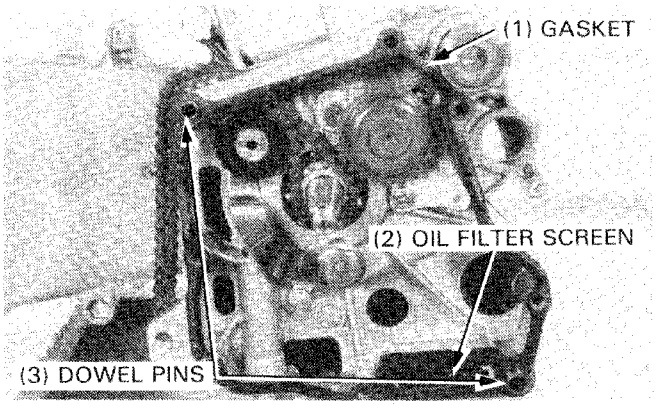

Install the right crankcase cover and tighten the bolts.

TORQUE: 9—12 N·m (0.9—1.2 kg-m, 7—9 ft-lb)

Apply grease to the engine mounting bushings.

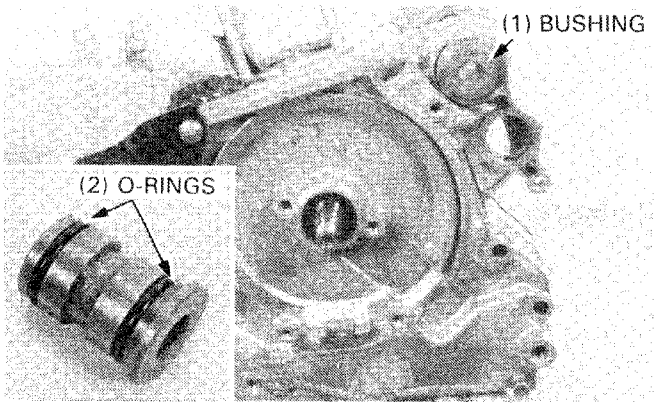

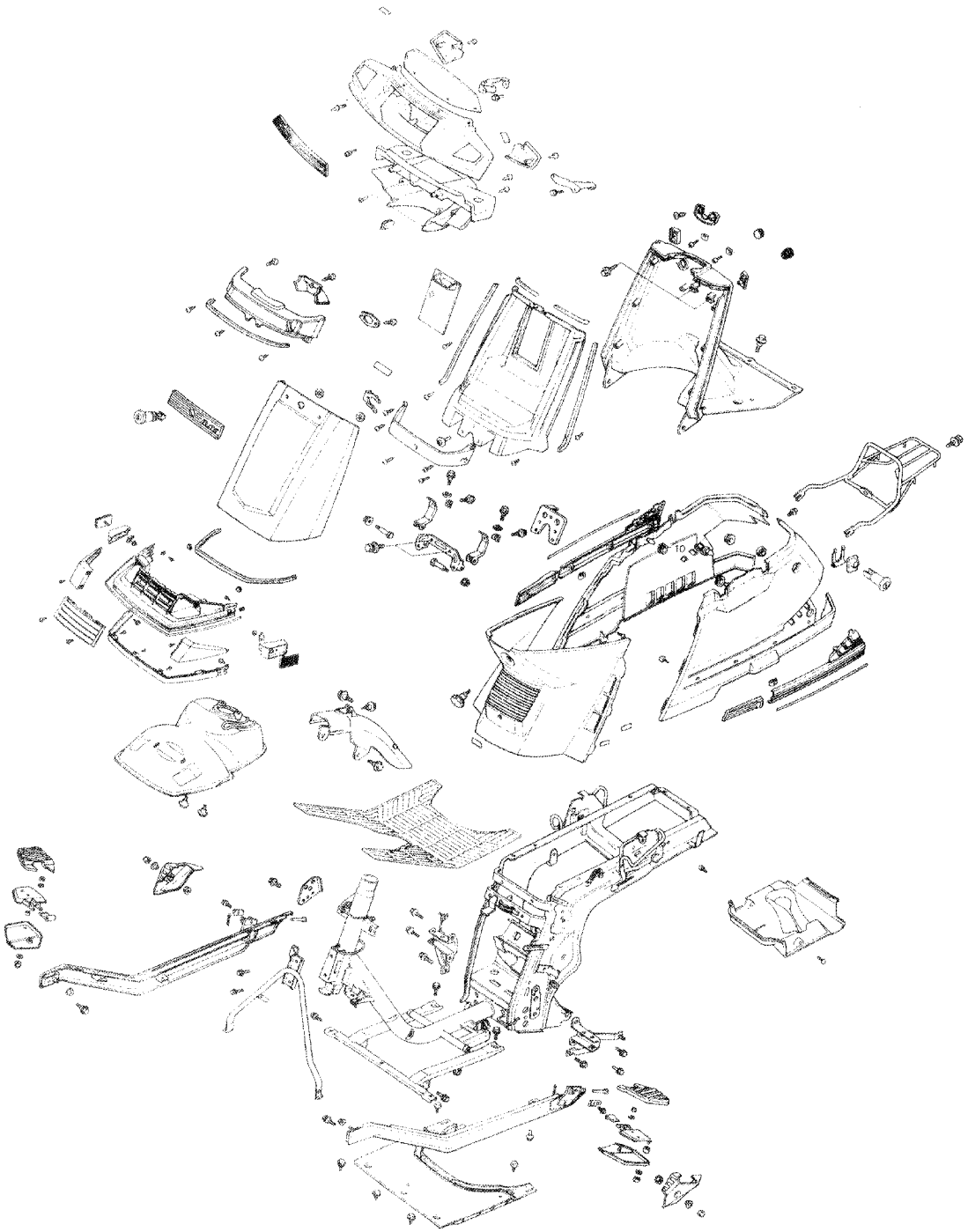
10

12. FRAME COVERS

SERVICE INFORMATION	12-1	TRUNK/LEG SHIELD REMOVAL	12-3
LEFT/RIGHT SIDE COVER REMOVAL	12-2	FRAME COVER INSTALLATION	12-4
FRONT TURN SIGNAL BASE REMOVAL	12-2		

SERVICE INFORMATION

GENERAL

- This section covers the frame covers.

TORQUE VALUES

Trunk hinge patch	2—4 N•m (0.2—0.4 kg-m, 1—3 ft-lb)
Trunk lid shell	0.5—1.5 N•m (0.05—0.15 kg-m, 0.4—1 ft-lb)
Leg shield flange bolt	2—4 N•m (0.2—0.4 kg-m, 1—3 ft-lb)
Right/left handle cover stay	0.5—1.5 N•m (0.05—0.15 kg-m, 0.4—1 ft-lb)
Floor reinforcement	30—45 N•m (3.0—4.5 kg-m, 22—33 ft-lb)

LEFT/RIGHT SIDE COVER REMOVAL

Loosen the center cover set knob and remove the center cover.

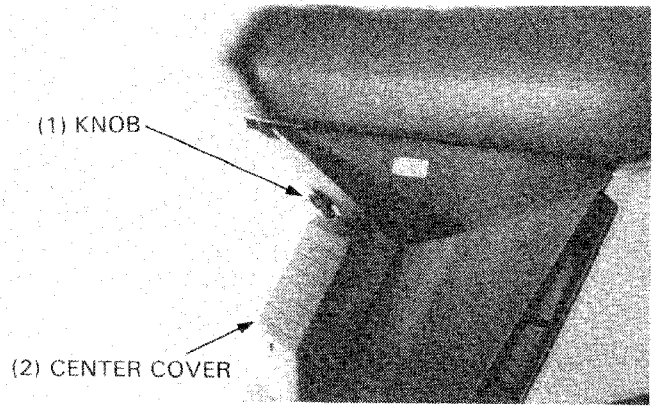

Remove the side cover attaching screw.
Remove the side cover guard.
Remove the right and left side covers.

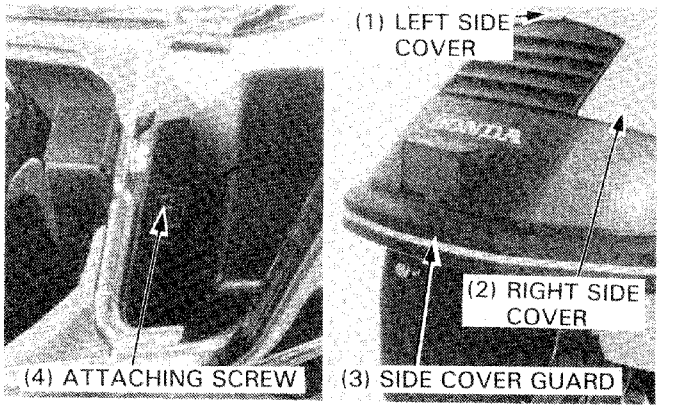

FRONT TURN SIGNAL BASE REMOVAL

Unfasten the cowl and remove the front louver.

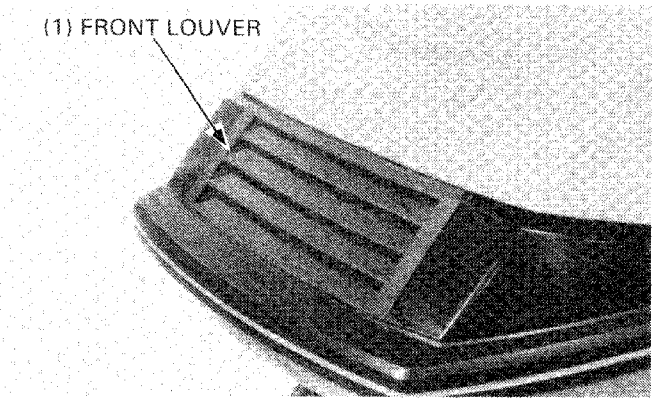

Remove the two screws.

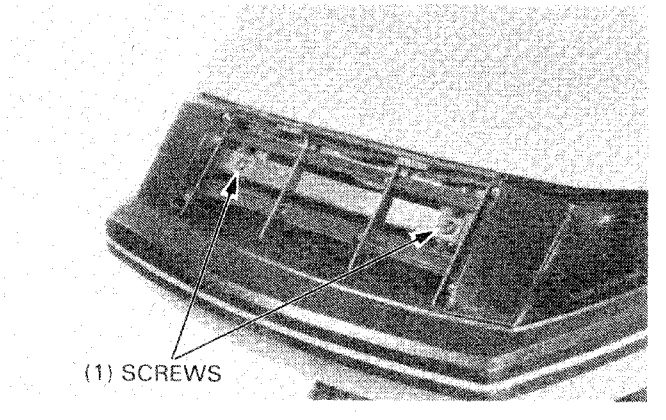

Remove the two screws and nuts under the fender.
Remove the front skirt.

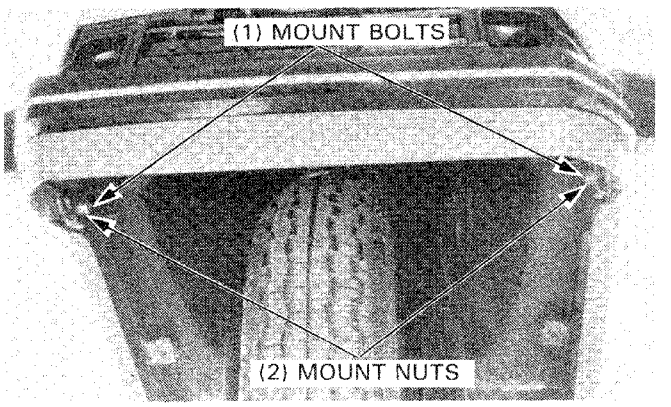

TRUNK/LEG SHIELD REMOVAL

Remove the two bolts and trunk lid.

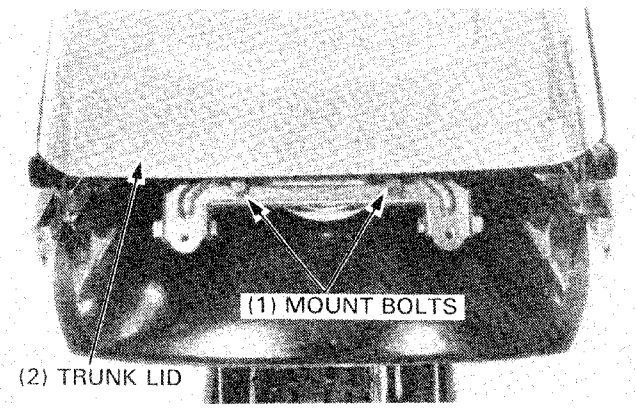

Remove the trunk lid seal rubbers.

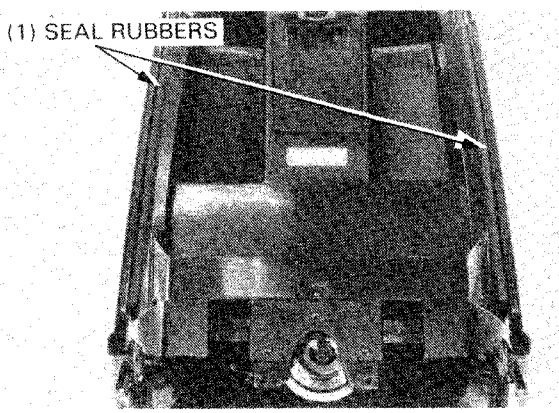

Remove the nine screws.
Disconnect the wire harness from the horn.
Remove the trunk shell.

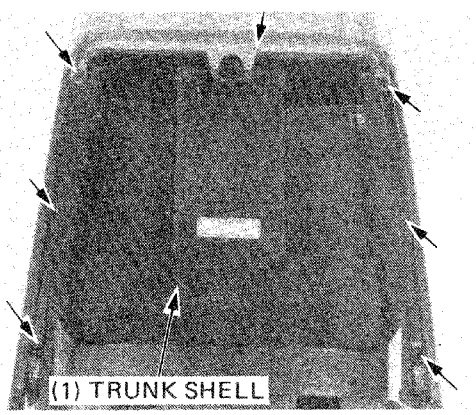

Remove the right and left side covers.
Remove the floor mat.

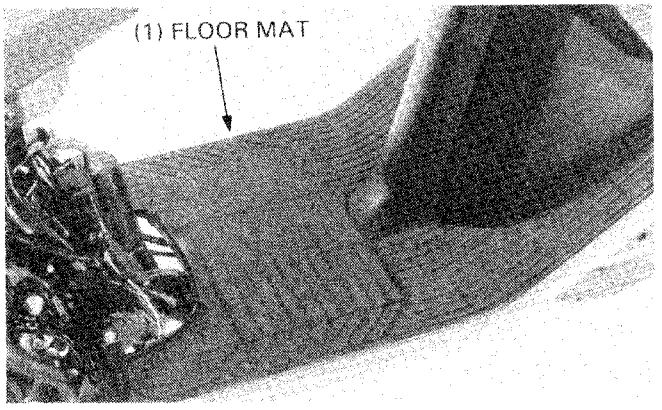

Remove the five bolts and floor panel.

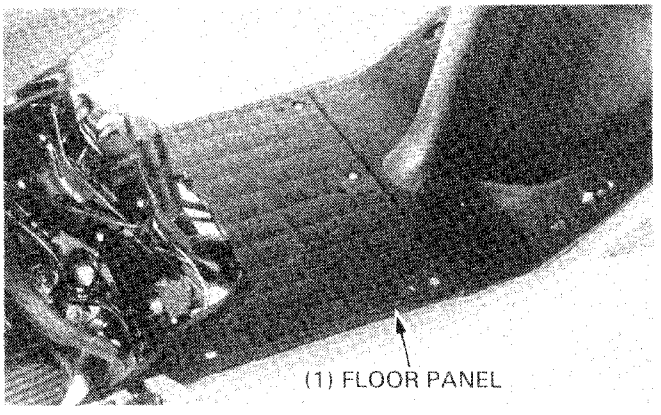

Remove the two leg shield attaching bolts and screws.
Disconnect the coupler and connector and remove the trunk shell.

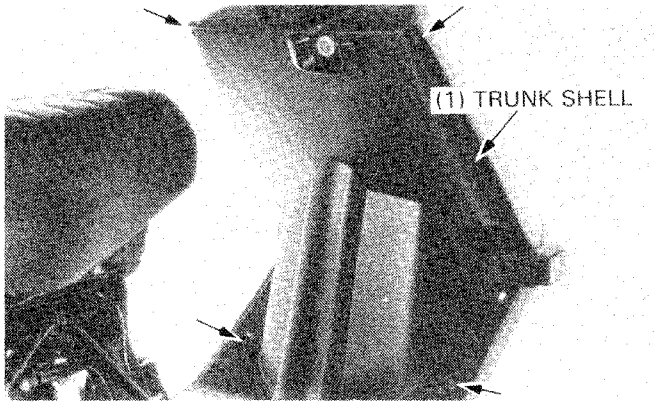

Remove the footpeg cover.
Remove the footpeg.
Remove the side rail.

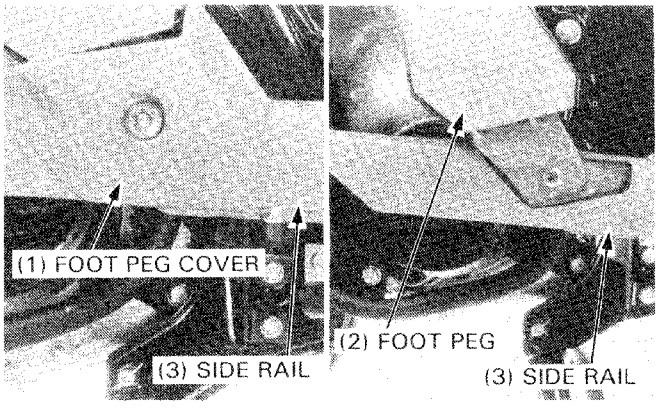

FRAME COVER INSTALLATION

Install each cover in the reverse order of removal.

NOTE

- Be careful that the wires and harnesses are not pinched.
- Be sure each of the tabs on all of the covers are secured.
- Align the seat lock with lock joint when installing the left side cover.

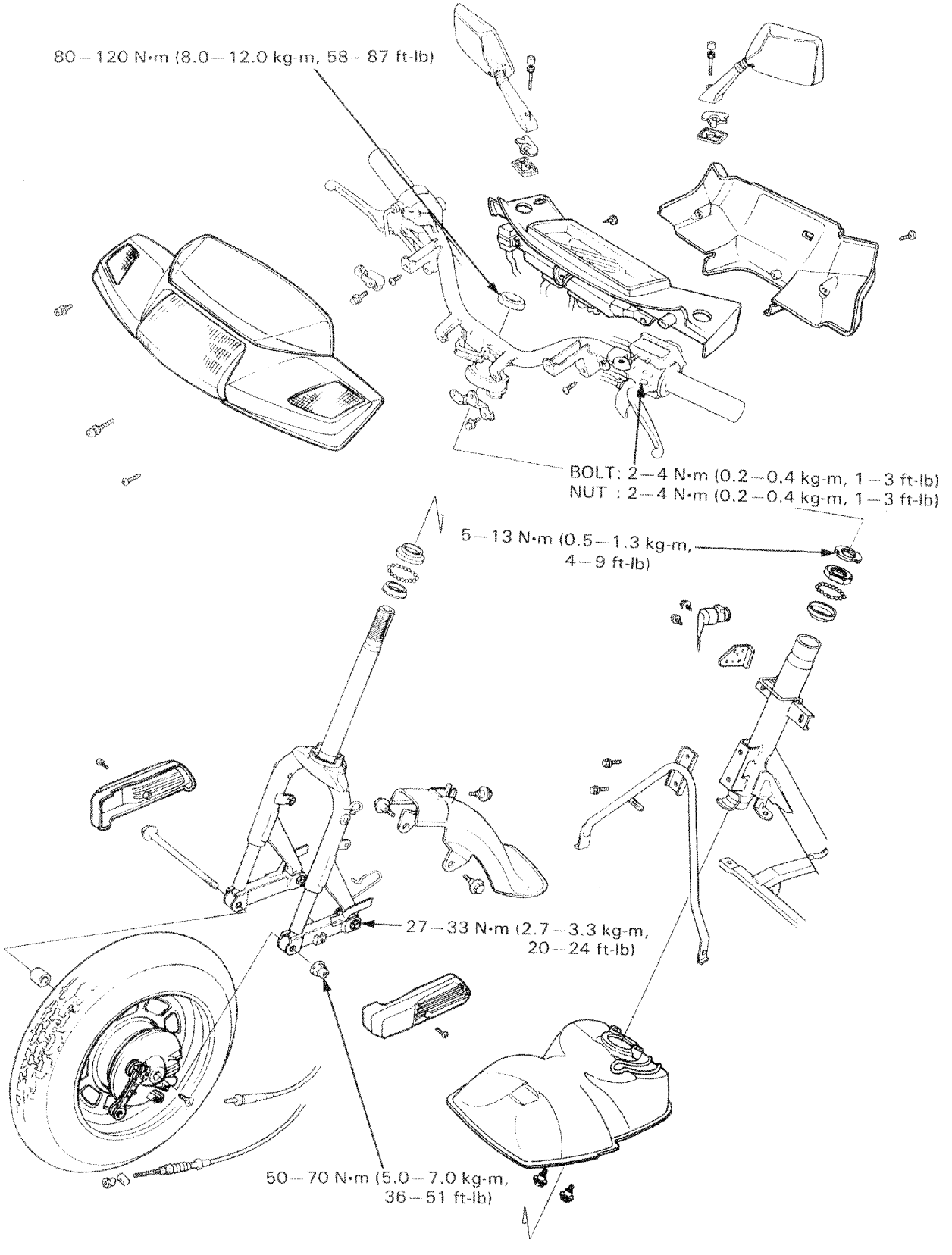
80—120 N·m (8.0—12.0 kg-m, 58—87 ft-lb)
BOLT: 2—4 N·m (0.2—0.4 kg-m, 1—3 ft-lb)
NUT : 2—4 N·m (0.2—0.4 kg-m, 1—3 ft-lb)
5—13 N·m (0.5—1.3 kg-m, 4—9 ft-lb)
27—33 N·m (2.7—3.3 kg-m, 20—24 ft-lb)
50—70 N·m (5.0—7.0 kg-m, 36—51 ft-lb)

13. STEERING/FRONT WHEEL/BRAKE/SUSPENSION

SERVICE INFORMATION	13-1	HANDLEBAR	13-7
TROUBLESHOOTING	13-2	FRONT WHEEL	13-10
HEADLIGHT	13-3	FRONT BRAKE	13-14
TURN SIGNAL LIGHT REPLACEMENT	13-4	SUSPENSION	13-18
INSTRUMENTS	13-4		

SERVICE INFORMATION

GENERAL

WARNING

- *Inhaled asbestos fibers have been found to cause respiratory disease and cancer. Never use an air hose or dry brush to clean brake or clutch assemblies. In the united states, use an OSHA-approved vacuum cleaner or alternate method approved by OSHA-designed to minimize the hazard caused by airborn asbestos fibers.*

- Refer to the Tubeless Tire Repair Manual for tire removal, repair, and remounting procedures.

SPECIFICATIONS

ITEM		STANDARD	SERVICE LIMIT
Axle runout		————	0.2 mm (0.01 in)
Rim runout	Radial	————	2.0 mm (0.08 in)
	Axial	————	2.0 mm (0.08 in)
Front brake drum I.D.		110.0 mm (4.33 in)	111.0 mm (43.7 in)
Brake lining thickness		4.0 mm (0.16 in)	2.0 mm (0.08 in)

13

TORQUE VALUES

Steering stem lock nut		5—13 N•m (0.5—1.3 kg-m, 4—9 ft-lb)
Steering stem nut		80—120 N•m (8.0—12.0 kg-m, 58—87 ft-lb)
Fork pivot arm		27—33 N•m (2.7—3.3 kg-m, 20—24 ft-lb)
Front shock absorber upper	'85, '86:	30—36 N•m (3.0—3.6 kg-m, 22—26 ft-lb)
	After '86:	27—33 N•m (2.7—3.3 kg-m, 20—24 ft-lb)
Front axle nut		50—70 N•m (5.0—7.0 kg-m, 36—51 ft-lb)
Lighting switch		2—4 N•m (0.2—0.4 kg-m, 1—3 ft-lb)
Turn signal switch		2—4 N•m (0.2—0.4 kg-m, 1—3 ft-lb)
Handle lever pivot bolt		2—4 N•m (0.2—0.4 kg-m, 1—3 ft-lb)
Handle lever nut		2—4 N•m (0.2—0.4 kg-m, 1—3 ft-lb)

TOOLS

Special

Lock nut wrench	07916—1870100	or equivalent commercially available in U.S.A.
Lock nut wrench	07916—GK00000	or 07702—0020001
Ball race remover	07946—GA70000	Not available in U.S.A.
Ball race remover	07953—KJ90000	

Common

Attachment, 42 x 47 mm	07746—0010300	
Driver	07749—0010000	
Pilot, 12 mm	07746—0040200	
Remover shaft	07746—0050300	
Remover head, 12 mm	07746—0050100	Equivalents commercially available in U.S.A.
Lock nut wrench, 30 x 32 mm	07716—0020400	
Extention bar	07716—0020500	

TROUBLESHOOTING

Hard steering
- Steering stem nut too tight
- Steering stem steel balls damaged
- Steering ball and cone races damaged
- Insufficient tire pressure

Steers to one side or does not track straight
- Uneven front shocks
- Bent front fork
- Bent front axle

Front wheel wobbling
- Bent rim
- Axle nut tightened improperly
- Bent spoke plate
- Faulty or unevenly worn tire
- Excessive wheel bearing play

Soft suspension
- Weak fork springs
- Damaged oil seals

Front suspension noise
- Fork link binding
- Loose front fork fasteners

HEADLIGHT

REMOVAL/INSTALLATION

Remove the two screws.

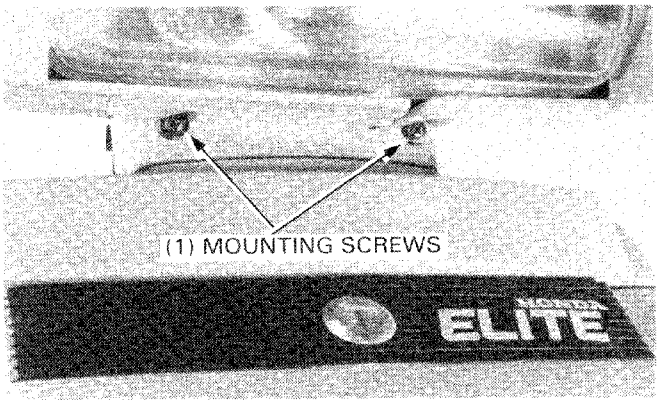

Remove the right and left screws.

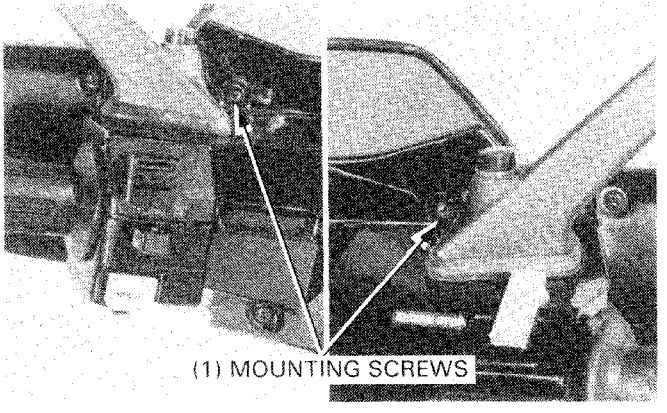

Disconnect the headlight and turn signal light couplers.
Remove the headlight case.
Installation is the reverse order of removal.

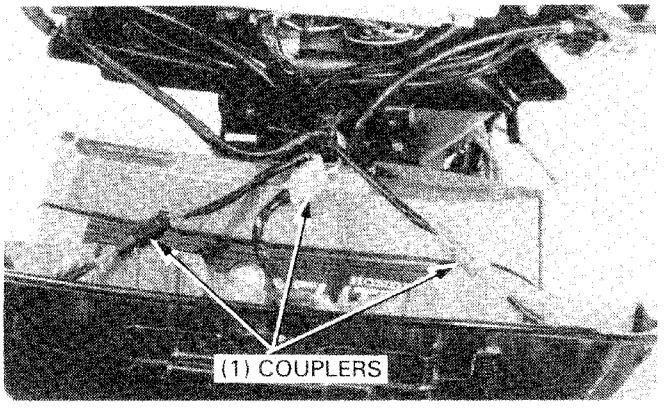

DISASSEMBLY/ASSEMBLY

Remove the screws and headlight.
Remove the headlight bracket.
Assembly is the reverse order of disassembly.

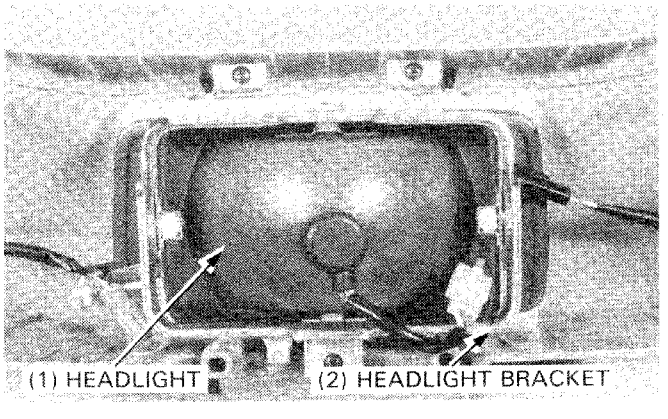

TURN SIGNAL LIGHT REPLACEMENT

Remove the screws.
Remove the turn signal light cover.
Remove the screw and turn signal light.
Installation is the reverse order of removal.

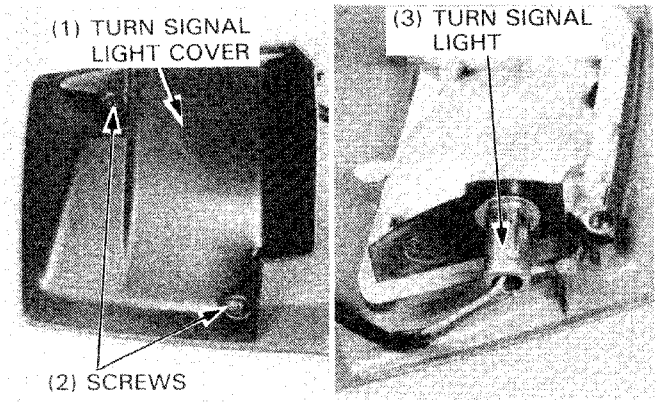

INSTRUMENTS

BULB REPLACEMENT

Remove the headlight (page 13-3).
Remove the instrument bulb sockets and replace the bulbs.

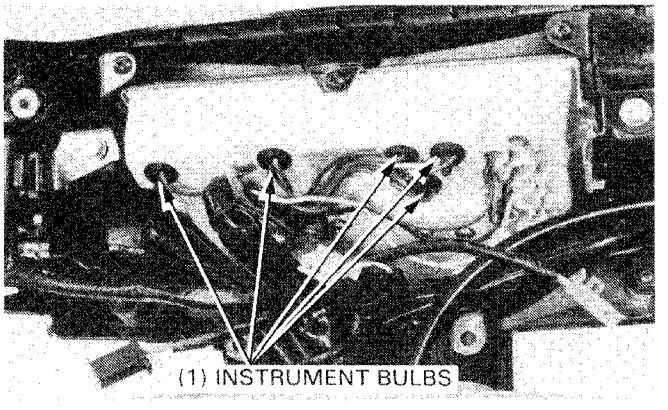

REMOVAL

Remove the headlight (page 13-3).
Remove the meter bracket bolts.

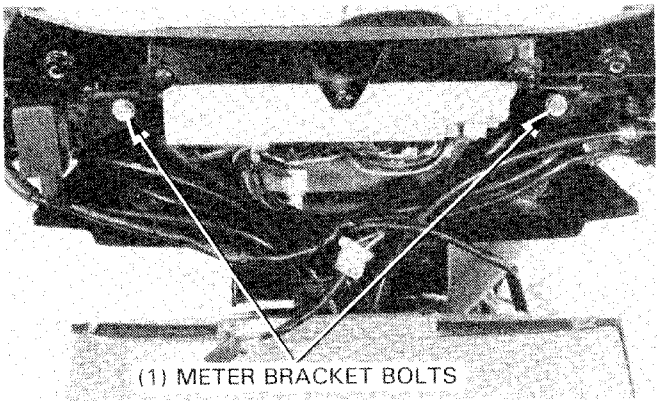

Remove the rear view mirror socket bolt caps.
Remove the socket bolts and rear view mirrors.

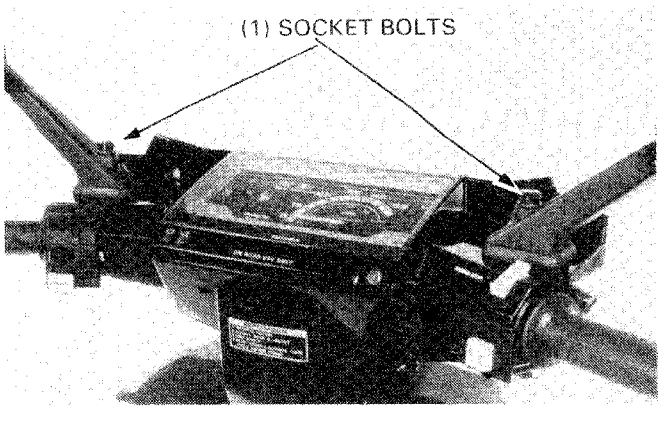

Remove the screws and handlebar lower cover.

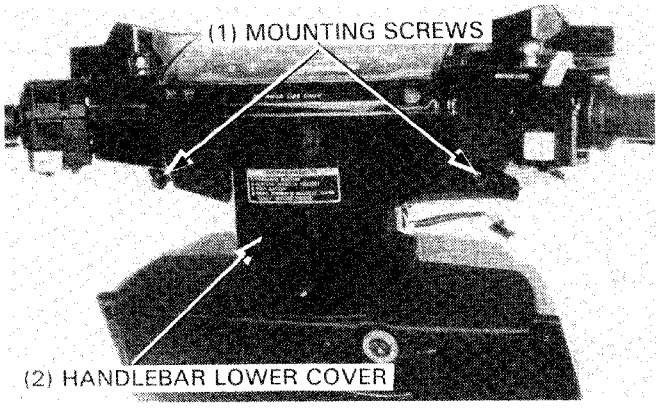

Open the trunk and remove the maintenance lid.
Disconnect the meter wire couplers and connectors.

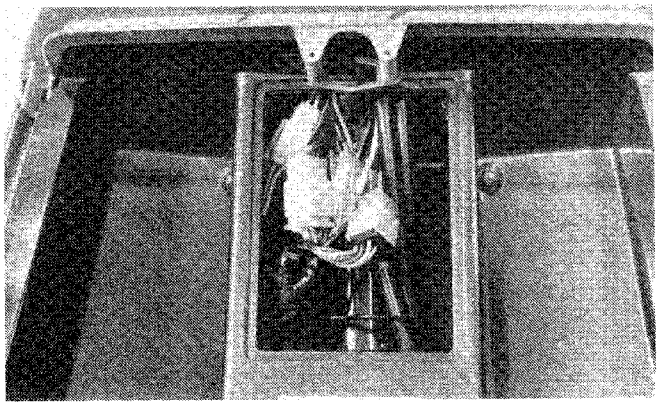

Disconnect the speedometer cable.

Remove the instruments.

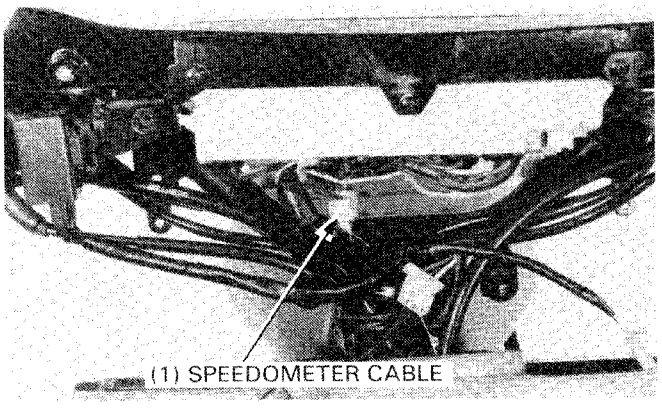

DISASSEMBLY

Remove the instruments from the cover by removing the screws.

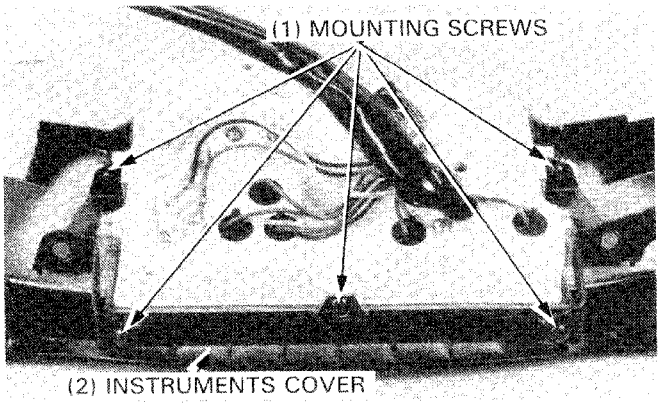

Remove the three screws and instrument lens.

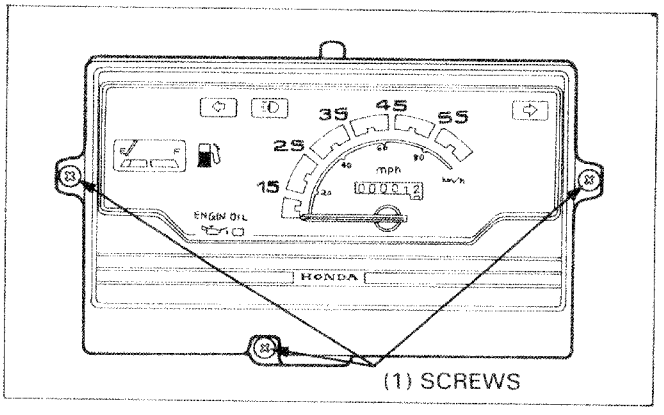

Remove each instrument by removing the screws.

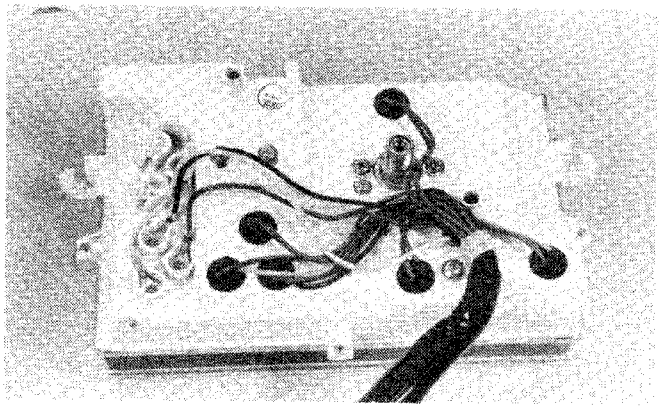

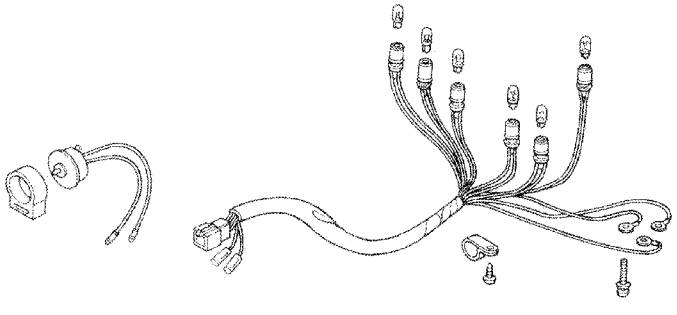

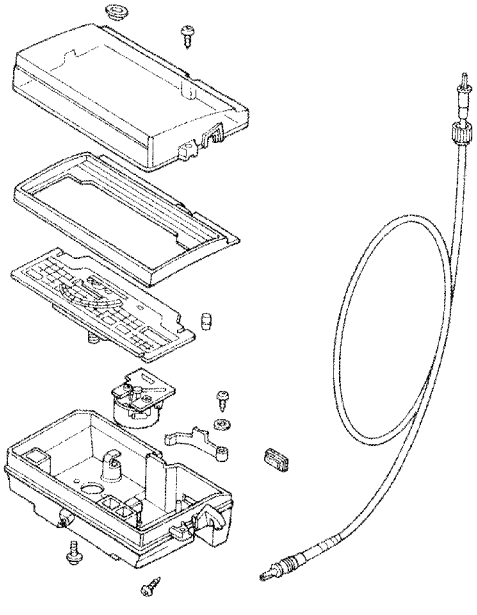

INSTRUMENT ASSEMBLY/INSTALLATION

Instrument assembly/installation is the reverse order of its disassembly/removal.

HANDLEBAR

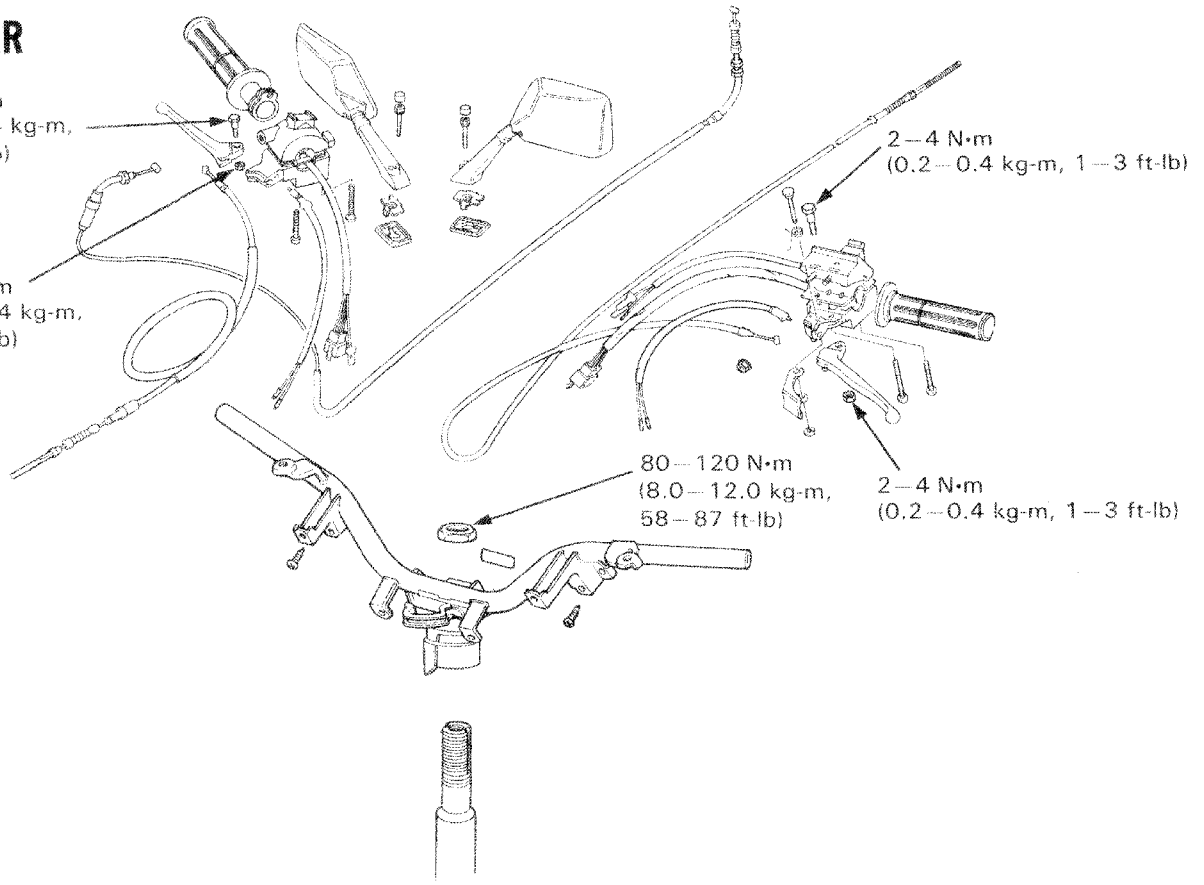

REMOVAL

Remove the headlight (page 13-3).
Remove the instruments.
Remove the turn signal relay.

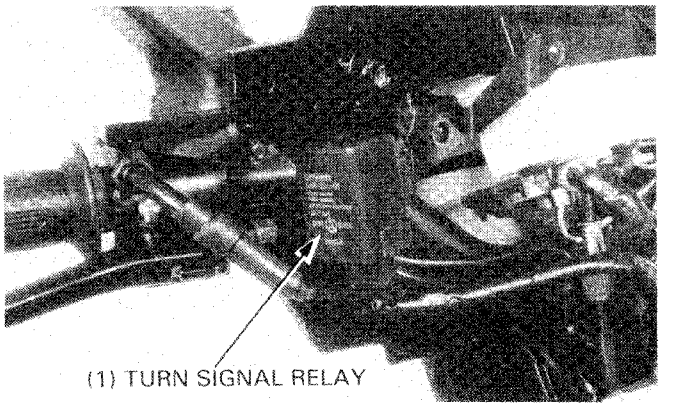

Remove the two screws and right switch case.

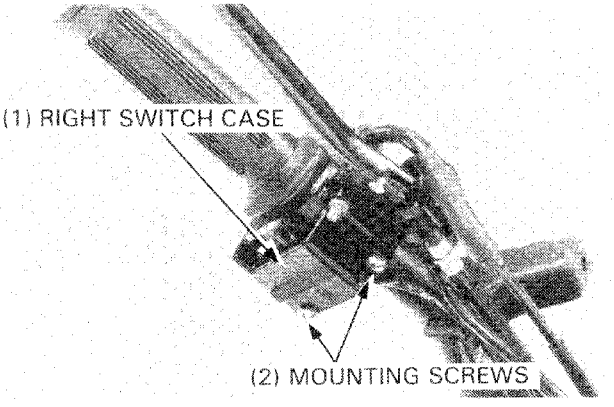

Remove the two screws and left switch case.

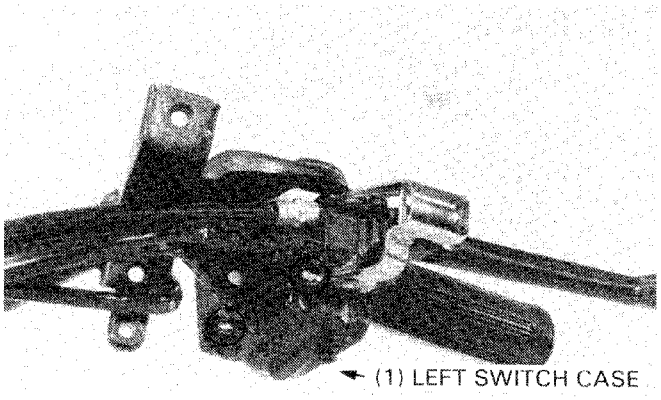

Remove the steering stem nut.
Remove the handlebar.

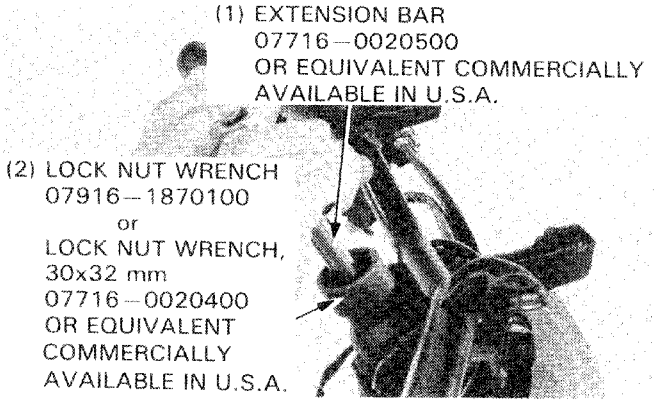

INSTALLATION

Install the handlebar by aligning the tabs with the steering stem grooves.

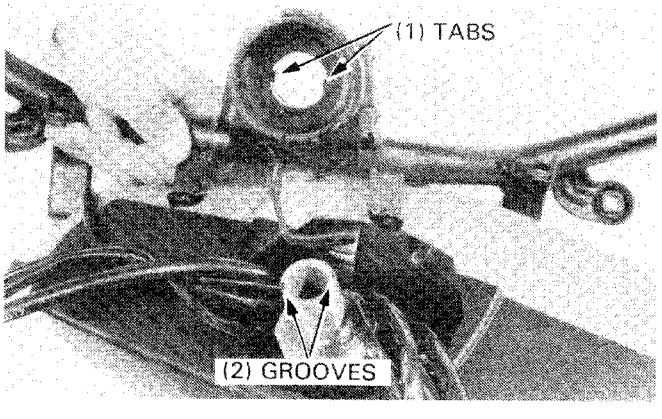

Install and tighten the steering stem nut.

TORQUE: 80—120 N·m (8.0—12.0 kg-m, 58—87 ft-lb)

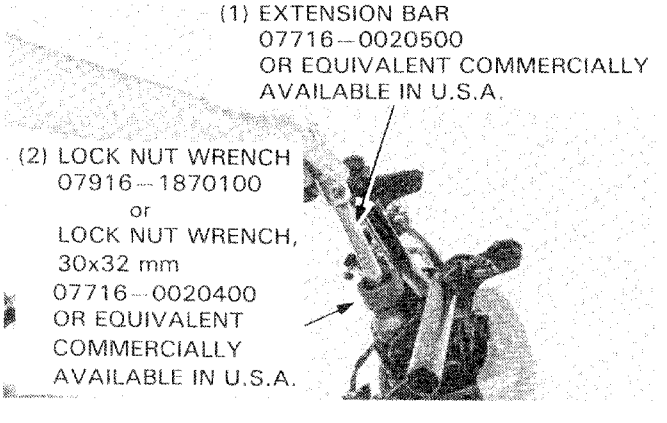

Apply Honda Bond A or Honda Hand Grip Cement (U.S.A. only) to the inside surfaces of the grips and to the clean surface of the left handlebar and throttle pipe. Wait for 3—5 minutes and install the grips. Rotate the grips for even application of the adhesive.

NOTE

- Allow the adhesive to dry for an hour before using.

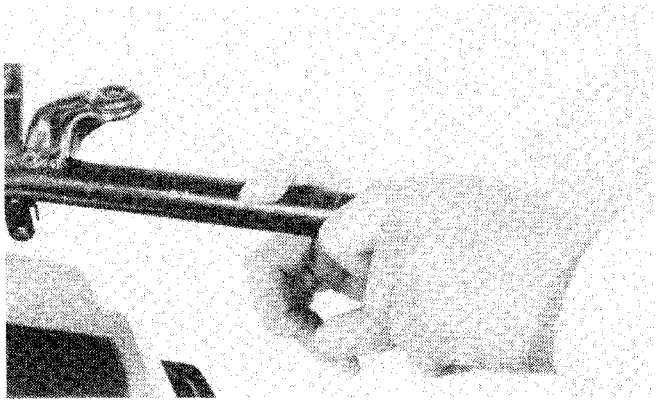

Install the left switch case.
Align the left switch case with the punch mark on the handlebar.

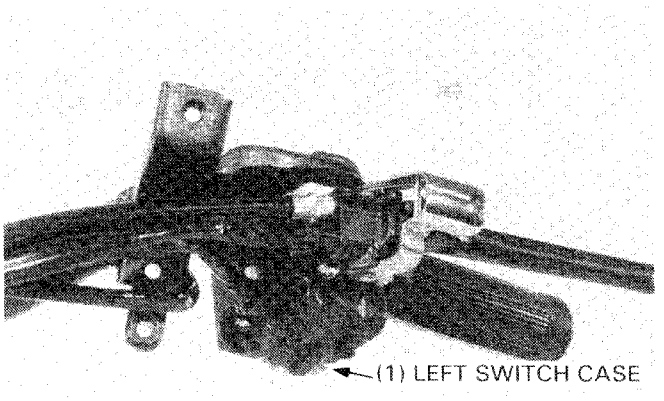

Install the right switch case.
Align the right switch case with the punch mark on the handlebar.

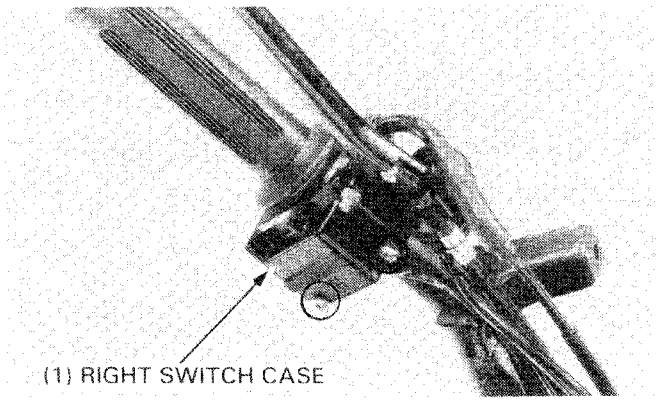

Install the turn signal relay.

NOTE

- Tighten the forward screw first, then tighten the rear screw.
- After tightening the screws, check that the throttle grip rotates freely in all steering positions.

Install the removed parts.
Perform the following inspections and adjustments:
— brake lever free play (page 3-9).
— headlight aim (page 3-10).
— throttle grip free play (page 3-4).

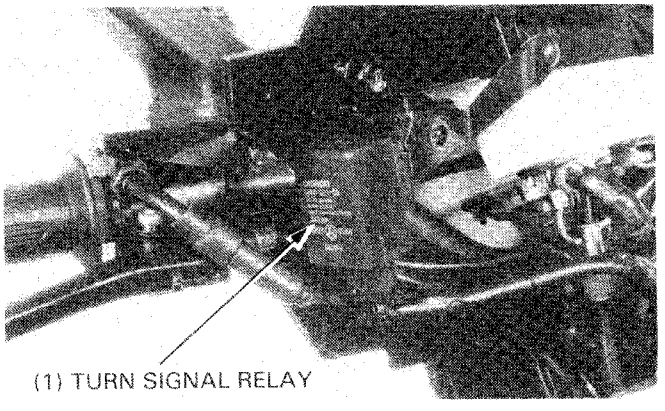

FRONT WHEEL

REMOVAL

Remove the right and left pivot arm covers.

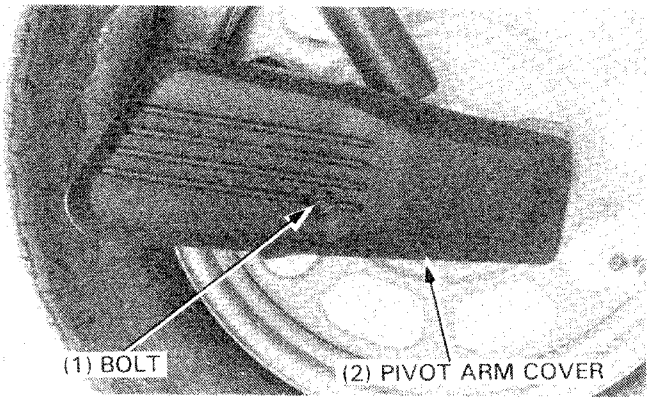

Disconnect the speedometer cable.
Disconnect the brake cable.
Remove the axle nut.
Remove the axle and the front wheel.

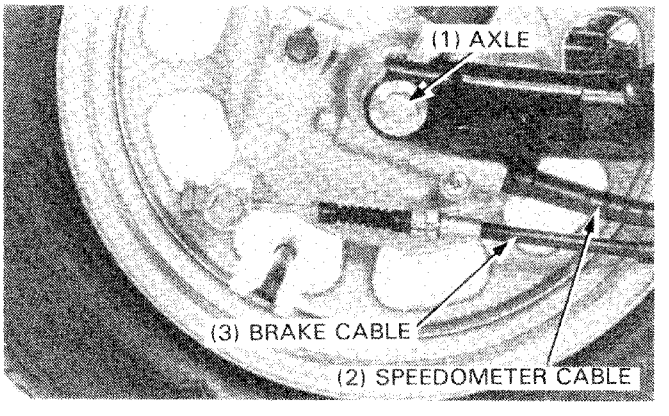

INSPECTION

Front axle
Set the axle in V blocks and measure the runout.
The actual runout is 1/2 of the total indicator reading.

SERVICE LIMIT: 0.2 mm (0.01 in)

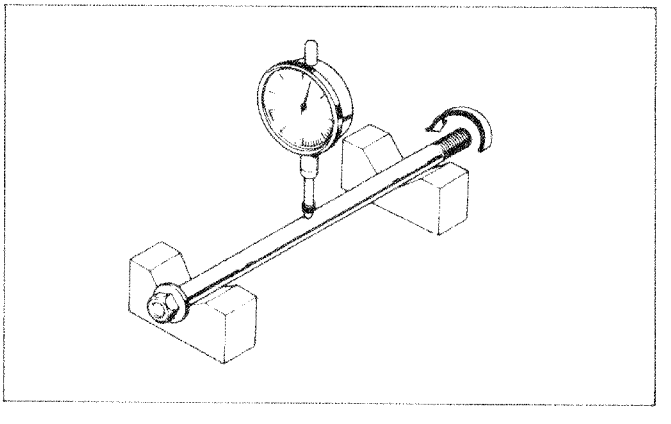

Bearing
Turn the inner race of each bearing with your finger. The bearings should turn smoothly and quietly. Also check that the bearing outer race fits tightly in the hub.

Remove and discard the bearings if the races do not turn smoothly, quietly, or if they fit loosely in the hub.

NOTE

- Replace the hub bearings in pairs.

For bearing replacement, see pages 13-11, 12.

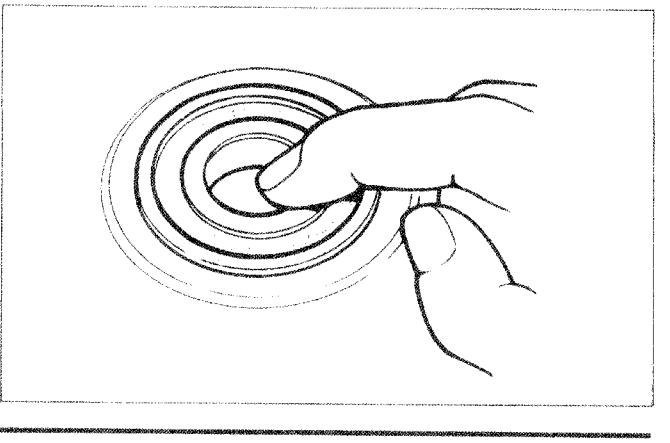

Front wheel rim
Place the wheel in a truing stand.
Spin the wheel by hand and measure the rim runout using a dial indicator

SERVICE LIMITS:
RADIAL: 2.0 mm (0.08 in)
AXIAL: 2.0 mm (0.08 in)

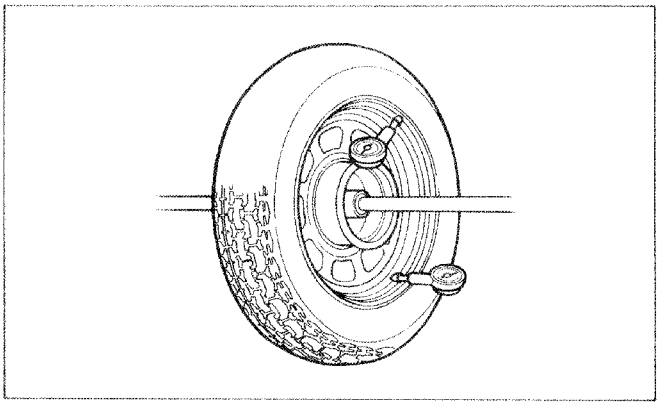

DISASSEMBLY

Remove the collar and dust seal.

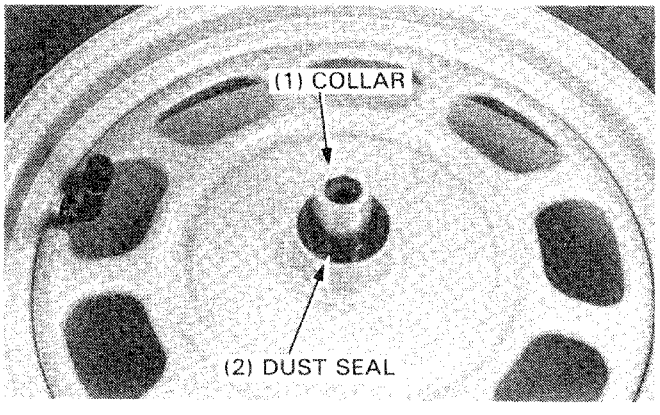

Remove the brake panel from the front wheel.

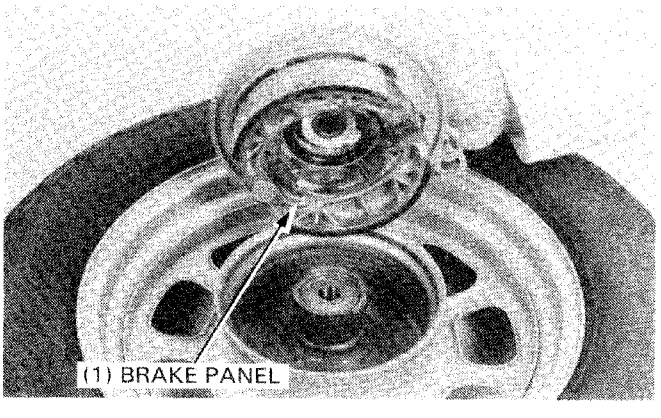

If the bearings need replacement, remove the bearings and distance collar.

NOTE

- Never reinstall old bearings; once the bearings are removed, they must be replaced with new ones.

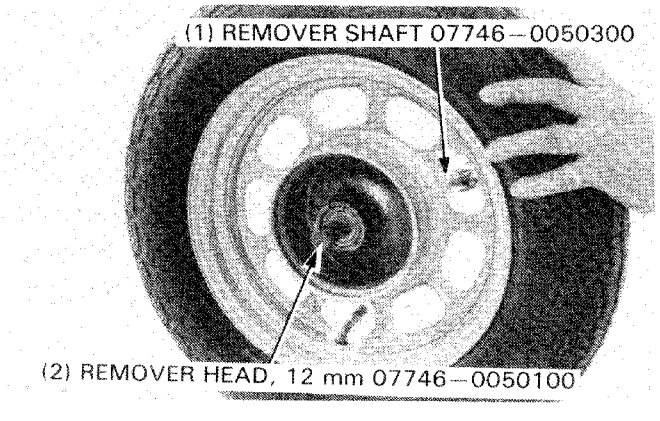

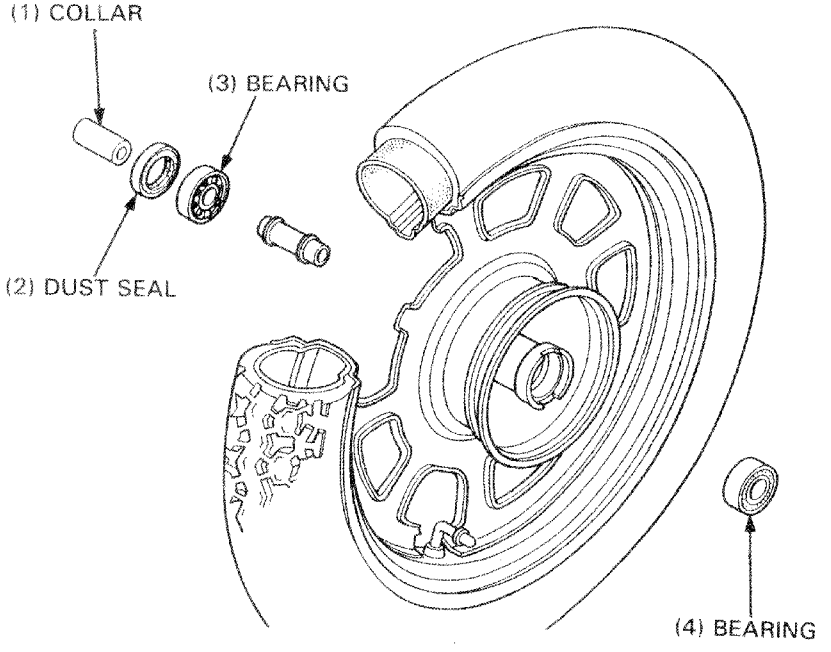

ASSEMBLY

Pack all bearing cavities with grease.
Drive the right side bearing into the hub.
Install the distance collar.
Drive the left side bearing into the hub.

NOTE

- Drive in the bearings squarely.
- Install the bearings with the sealed ends facing out.

WARNING

- *Contaminated brake linings reduce stopping power. Keep grease off the linings and brake drum.*

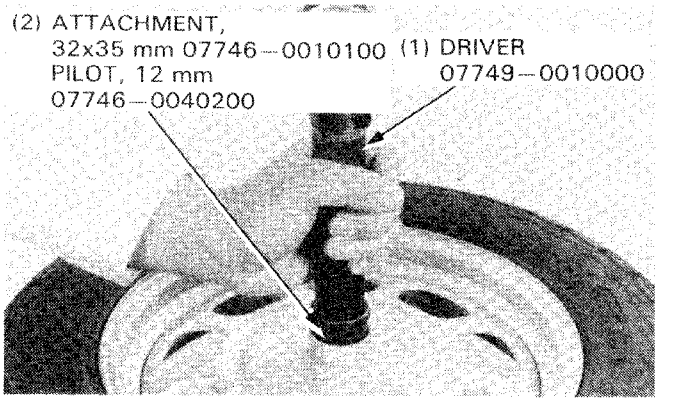

Apply grease to the inside of the dust seal.
Install the dust seal and side collar.

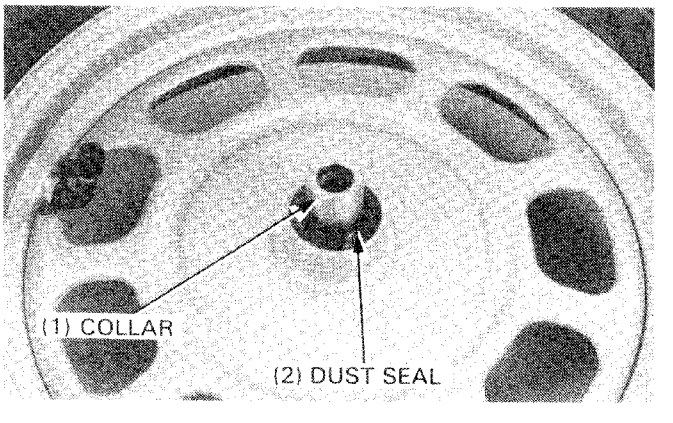

Install the front brake assembly.

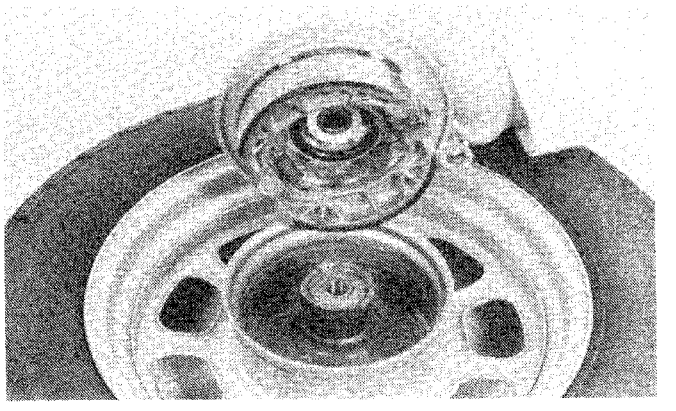

INSTALLATION

Position the front wheel between the fork legs, aligning the brake panel groove with the pivot arm stopper.
Insert the axle shaft through the wheel hub from the left side.

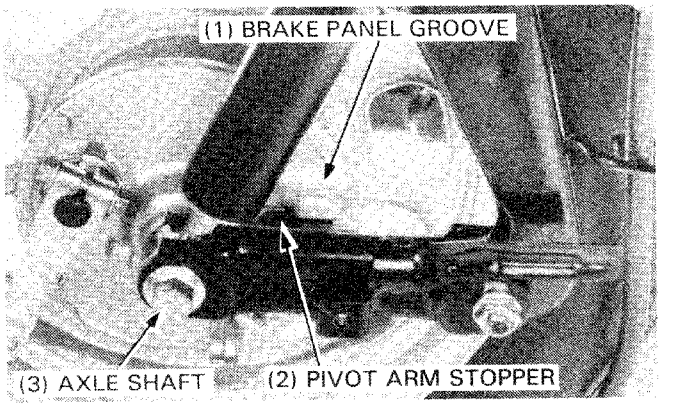

Install and tighten the axle nut.

TORQUE: 50—70 N·m (5.0—7.0 kg-m, 36—51 ft-lb)

Install the speedometer cable and secure it with the set screw.
Install the brake cable through the brake panel and to the brake arm.
Adjust the front brake lever free play (page 3-9).

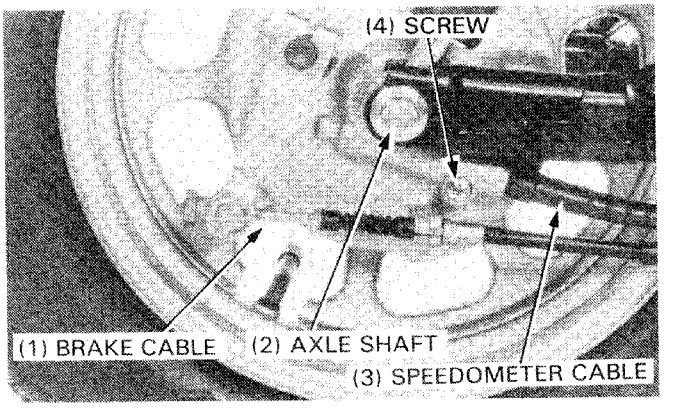

Install the left and right pivot arm covers.
Make sure that the hook on the pivot arm is inserted into the cover properly.

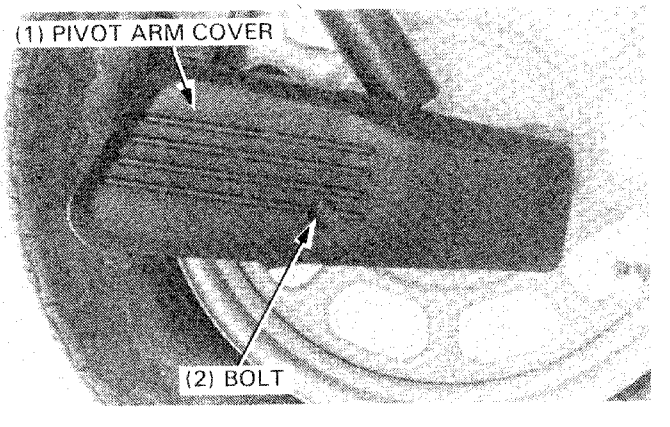

FRONT BRAKE

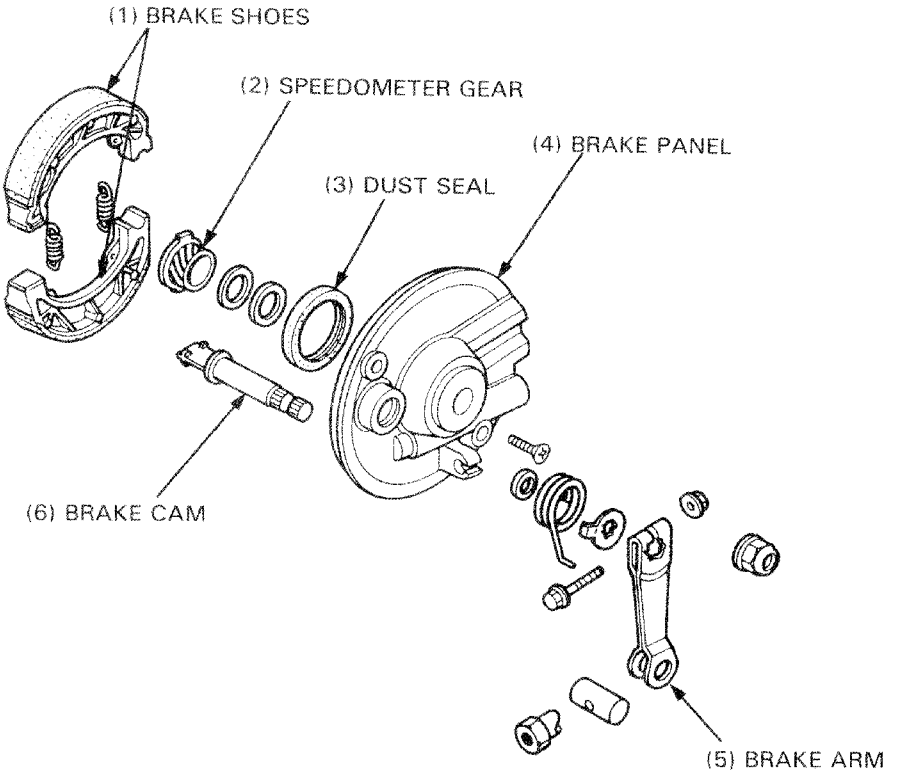

REMOVAL

Remove the front wheel (page 13-10).
Remove the brake panel.

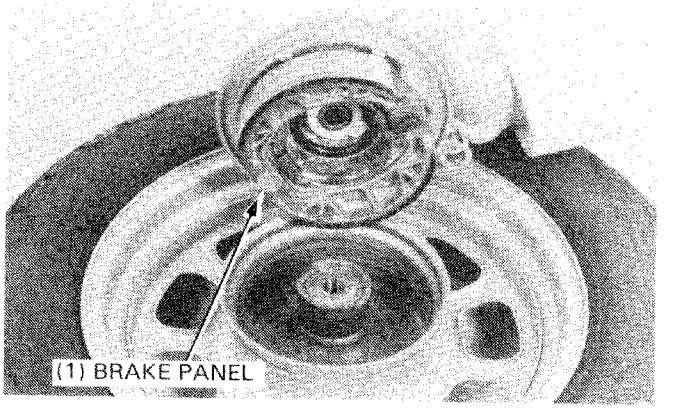

INSPECTION

Front brake drum
Measure the brake drum I.D.

SERVICE LIMIT: 111 mm (4.37 in)

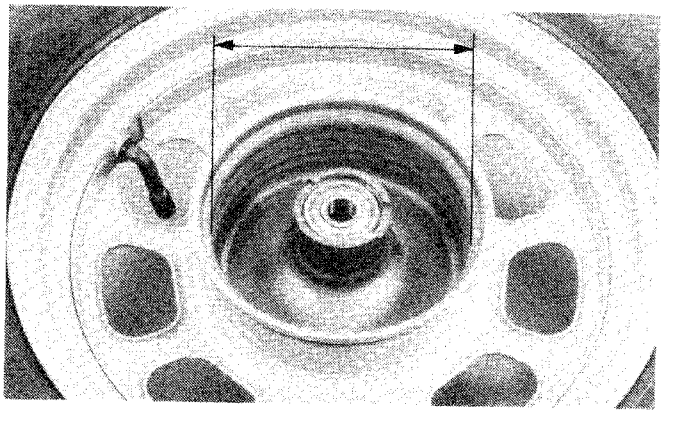

Brake lining
Measure the brake lining thickness.

SERVICE LIMIT: 2.0 mm (0.08 in)

WARNING

- *Contaminated brake linings reduce stopping power. Keep grease off the linings.*
- *Inhaled asbestos fibers have been found to cause respiratory disease and cancer. Never use an air hose or dry brush to clean brake or clutch assemblies. In the united states, use an OSHA-approved vacuum cleaner or alternate method approved by OSHA-designed to minimize the hazard caused by airborn asbestos fibers.*

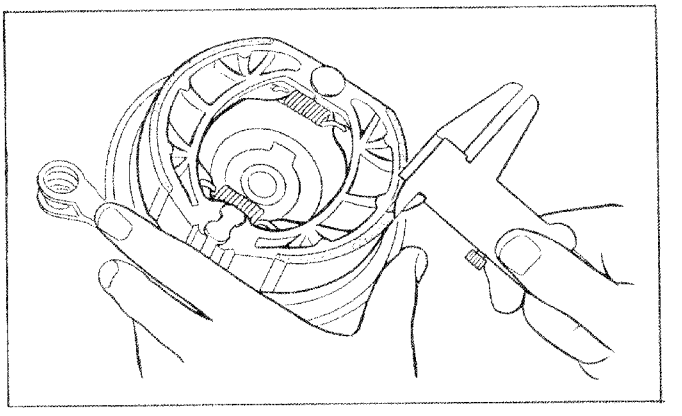

DISASSEMBLY

Remove the brake shoes.

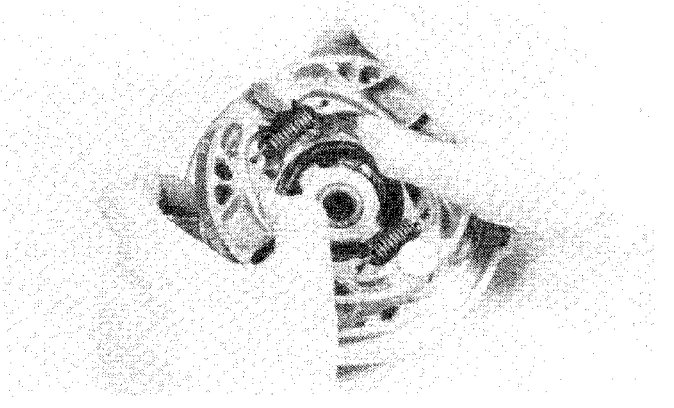

Remove the brake arm and indicator plate.

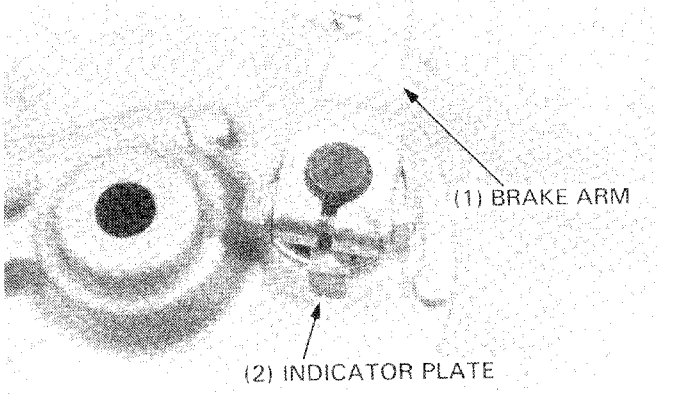

Remove the spring and dust seal.

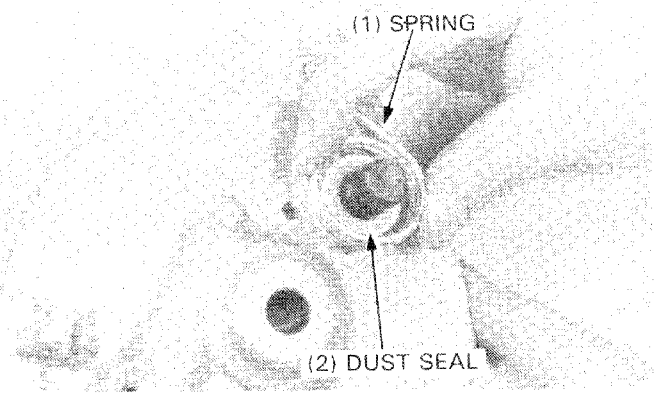

Remove the brake cam.
Remove the dust seal and speedometer gear from the brake panel.

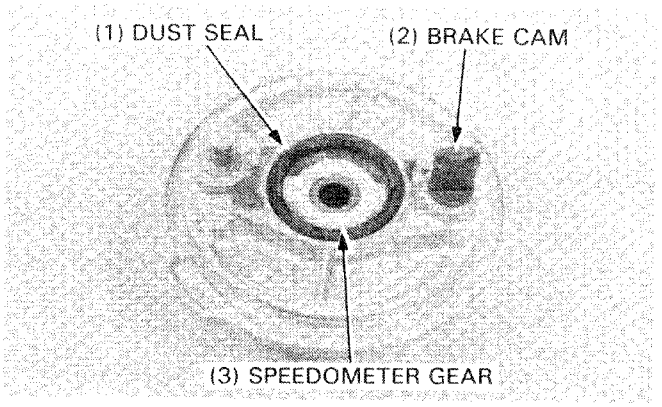

ASSEMBLY

Lubricate the speedometer drive gear with grease and install the drive gear in the brake panel.

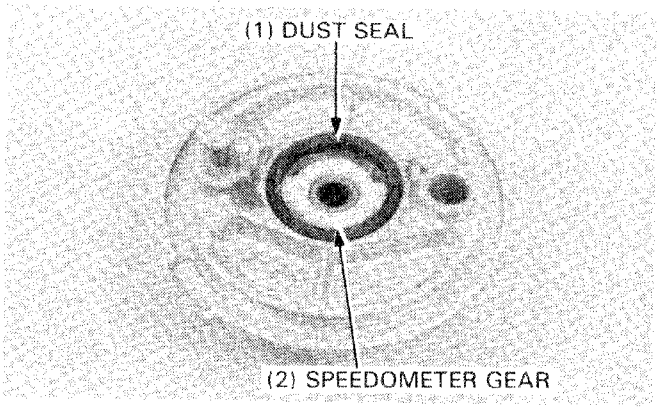

Apply grease sparingly to the anchor contact area of each shoe and to the brake shoe contact area of the brake cam.

WARNING

- *Avoid getting grease on the inside of the brake drum or braking power will be reduced. Clean the inside of the brake panel thoroughly.*

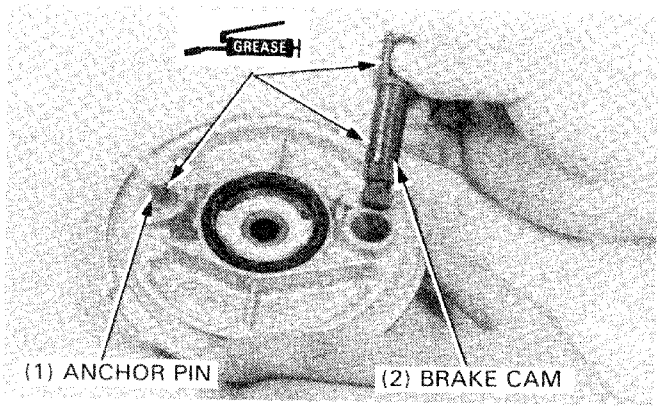

Install the dust seal.
Align the brake panel spring pin with the hole in the brake panel.

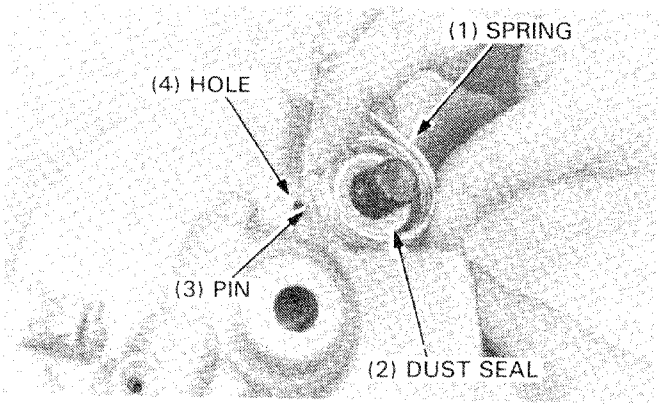

Install the indicator plate.

NOTE

- Align the slit marks on the plate and brake cam.

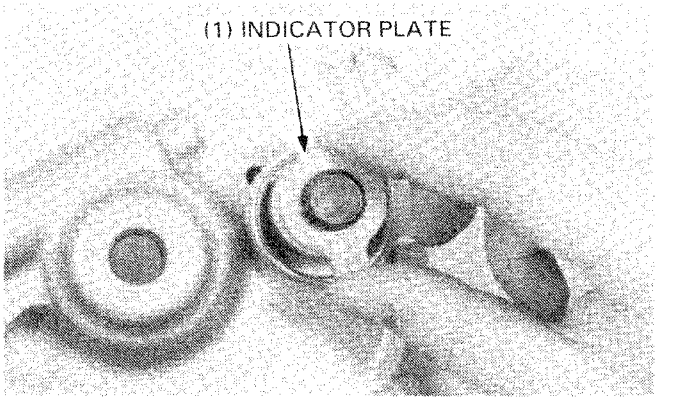

Install the brake arm.

NOTE

- Align the marks on the brake arm and cam.

Tighten the brake arm bolt.

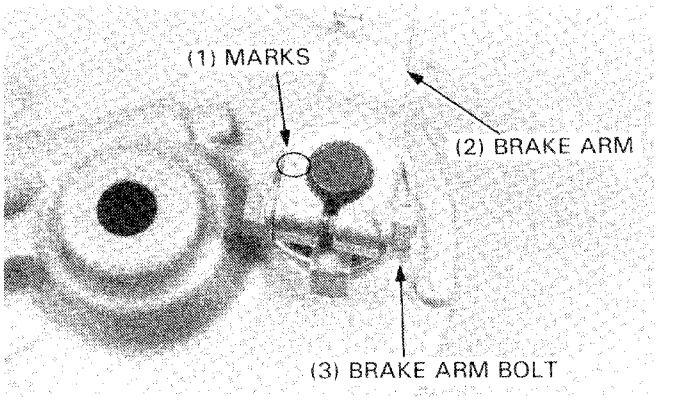

Install the brake shoes with the shoe springs onto the brake panel.

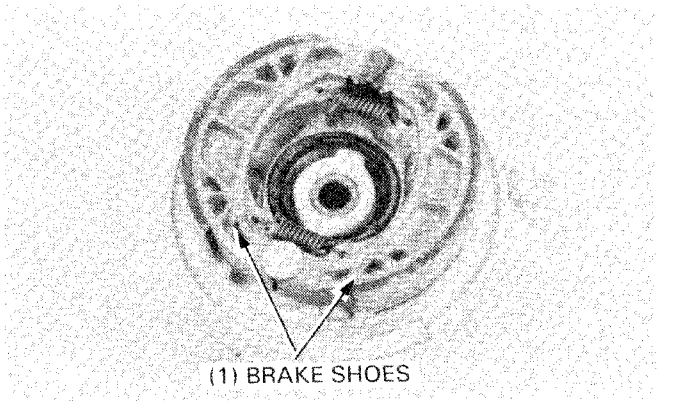

Install the brake panel into the front wheel hub.
Install the front wheel (page 13-13).

NOTE

- Align the prong on the speedometer gear box with the groove in the hub.

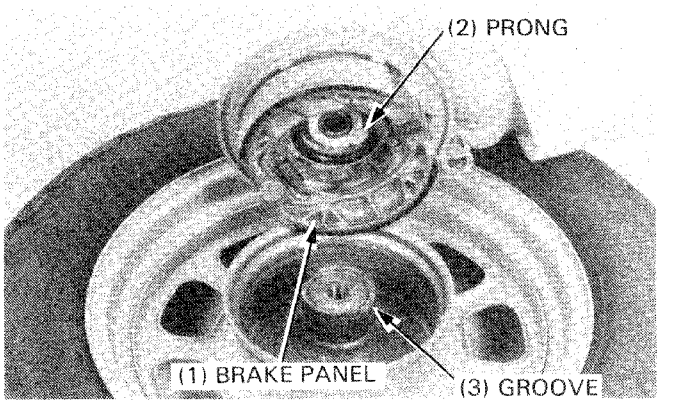

SUSPENSION

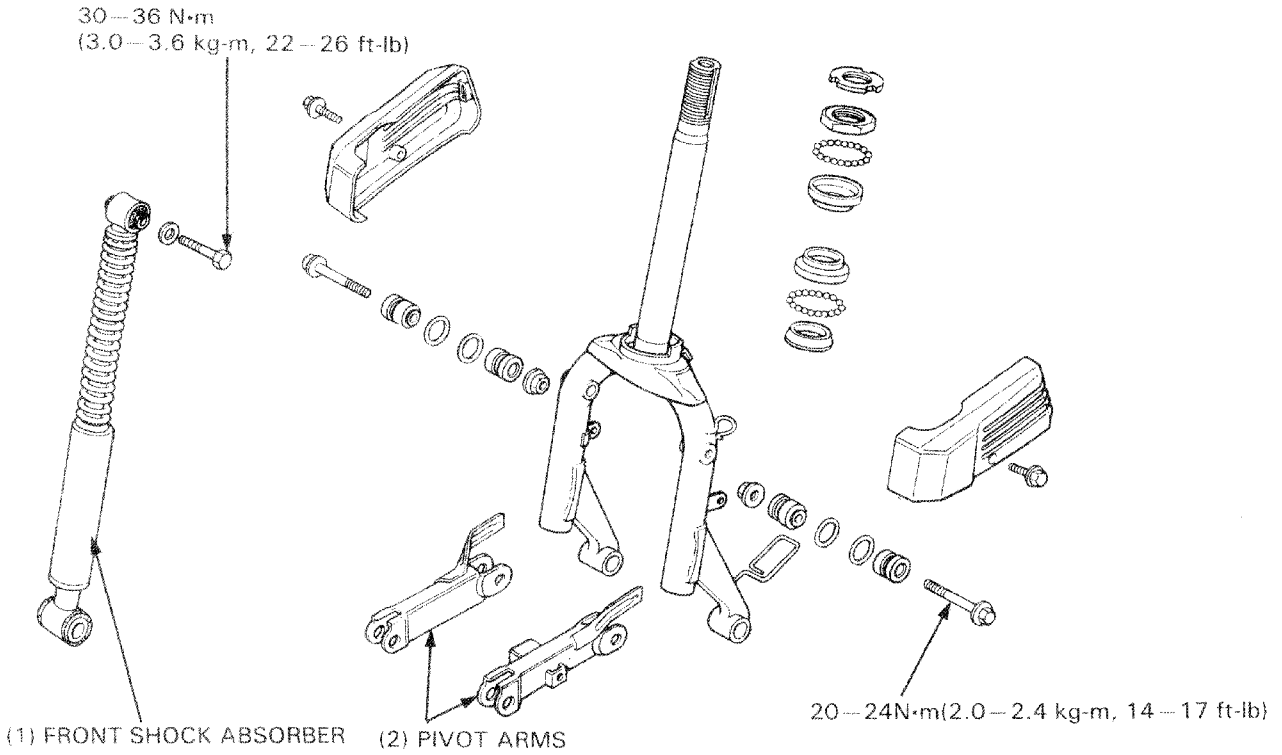

PIVOT ARM REMOVAL

Remove the front wheel (page 13-10).
Remove the pivot arms by removing the bolt.

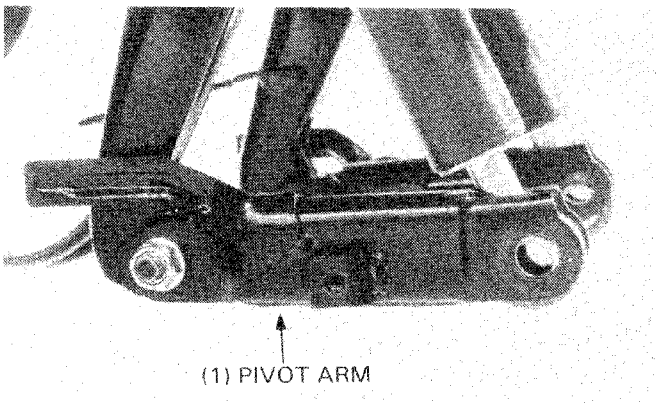

Remove the front shock absorber bushings.
Remove the pivot arm bushings.

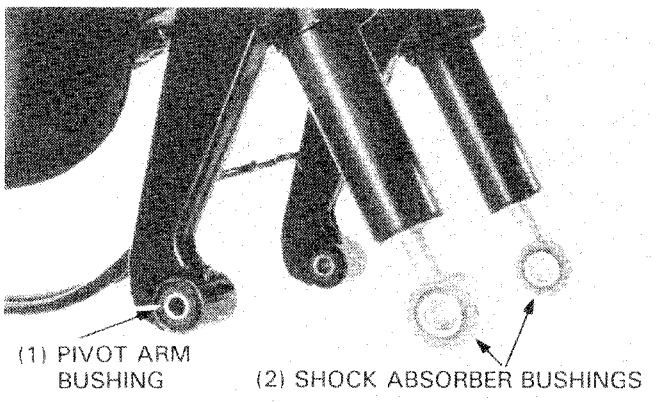

INSPECTION

Front shock absorber bushing
Inspect the front shock absorber bushings for wear or damage.

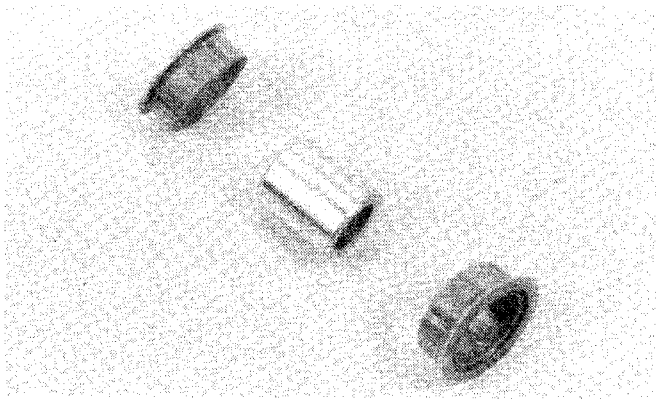

Pivot arm bushing
Inspect the pivot arm bushings for wear or damage.

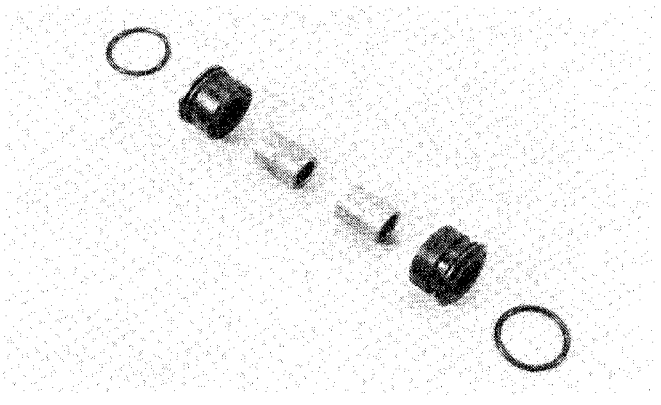

SHOCK ABSORBER REMOVAL

Remove the front shock absorber upper mount bolts and remove the front shock absorbers.

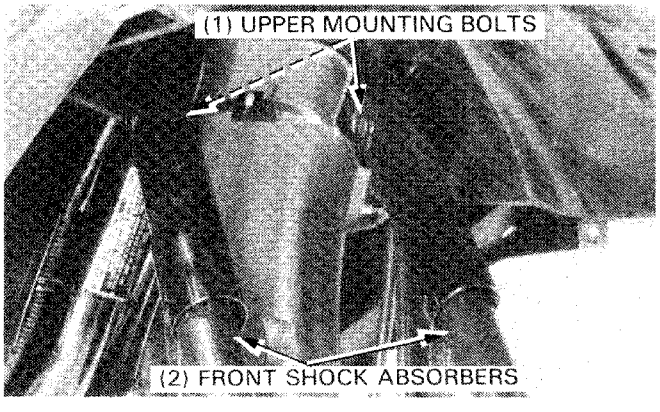

Inspect the front shock absorbers for damage.

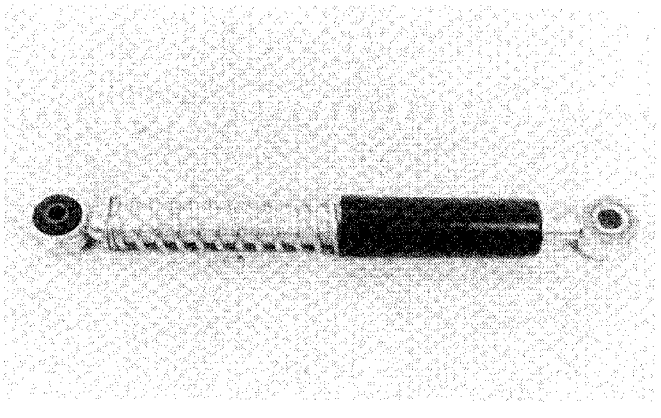

FRONT SHOCK ABSORBER INSTALLATION

Install the front shock absorbers into the fork and tighten the upper mount bolts.

TORQUE:
'85, '86: 30–36 N·m (3.0–3.6 kg-m, 20–24 ft-lb)
After '86: 27–33 N·m (2.7–3.3 kg-m, 20–24 ft-lb)

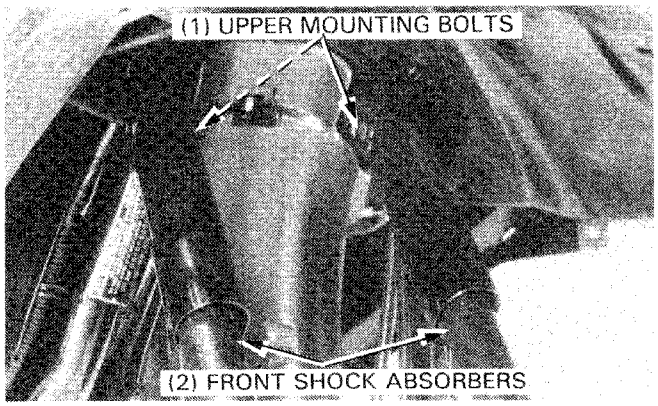

Apply grease to the pivot arm bushings and install them into the fork.
Install the fork pivot arms with bolts and nuts.

TORQUE: 27–33 N·m (2.7–3.3 kg-m, 20–24 ft-lb)

Install the front wheel (page 13-13).

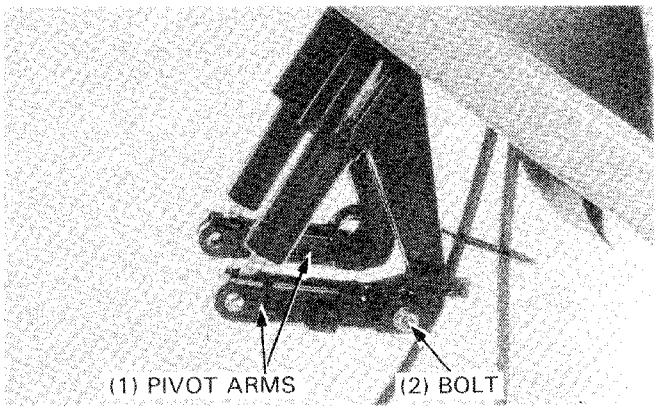

FORK

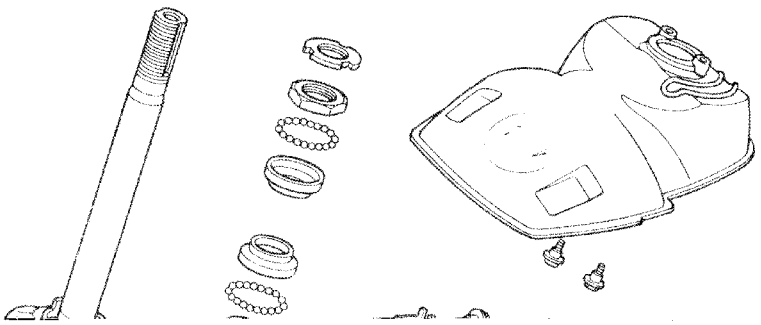

FRONT FORK REMOVAL

Remove the following:
- headlight (page 13-3).
- instruments (page 13-4).
- handlebar (page 13-7).
- front wheel (page 13-10).

Remove the steering stem lock nut.

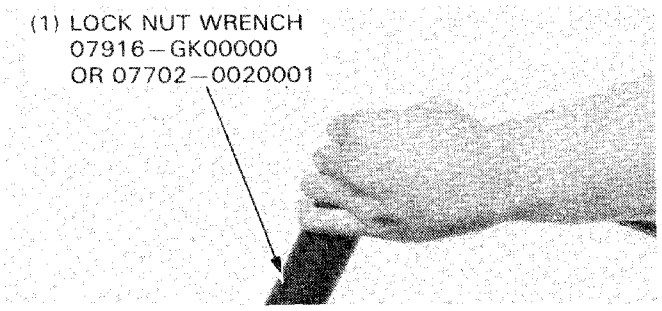

BALL RACE REPLACEMENT

Inspect the top and bottom ball races and replace them if they are worn or damaged.

Remove the top and bottom ball races with special tools.

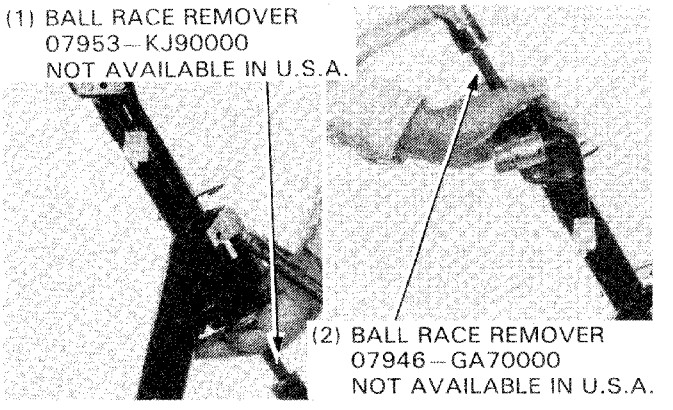

Drive in new top and bottom ball races with the driver and attachment.

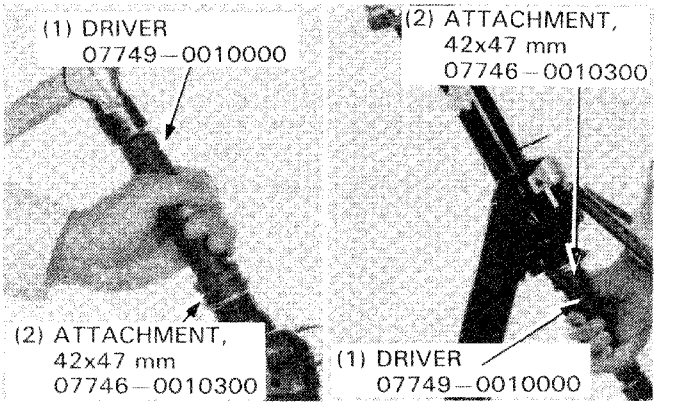

FORK INSTALLATION

Install the front shock absorber (page 13-20).
Install the front inner fender to the fork.
Install the front fender to the frame.

Apply grease to the top and bottom ball races and install 26 steel balls in the top ball race and 29 steel balls in the bottom ball race.

Install the fork into the head pipe, being careful not to drop the steel balls.

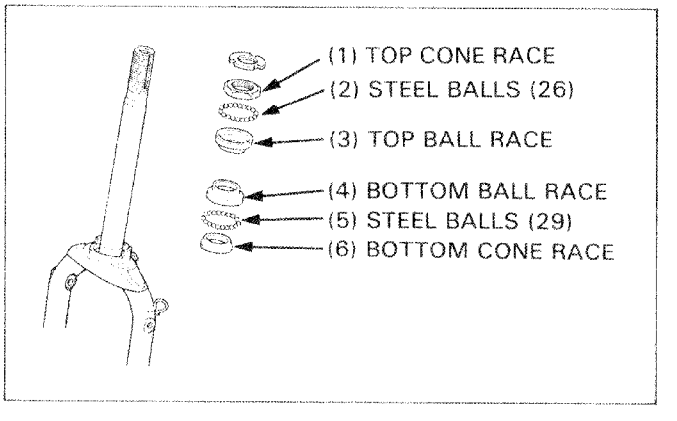

Lubricate the top cone race with grease.
Screw in the race until snug against the top ball race, then back it out 1/8 turns.

NOTE

- Check that the steering stem rotates freely and that there is no vertical play.

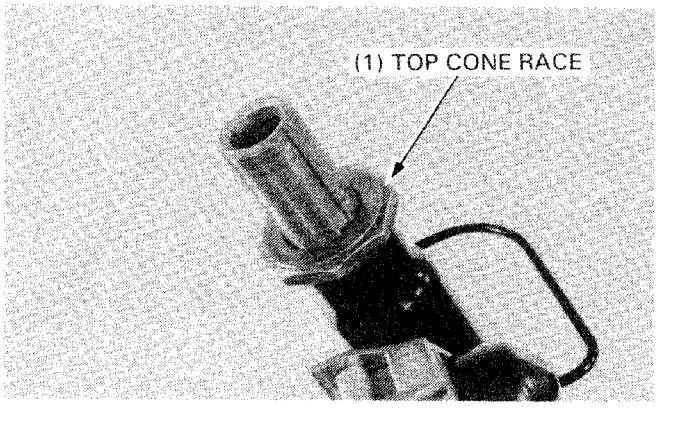

Install the steering stem lock nut and tighten it while holding the top cone race from turning.

TORQUE: 5 – 13 N·m (0.5 – 1.3 kg-m, 4 – 9 ft-lb)

Install the following:
- front wheel (page 13-13).
- handlebars (page 13-8).
- instruments (page 13-6).
- headlight (page 13-3).

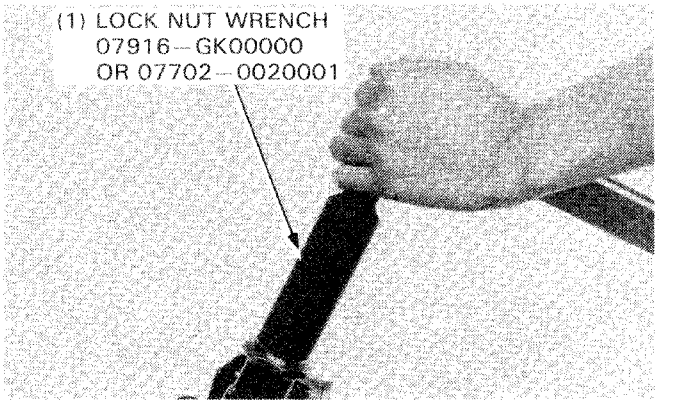

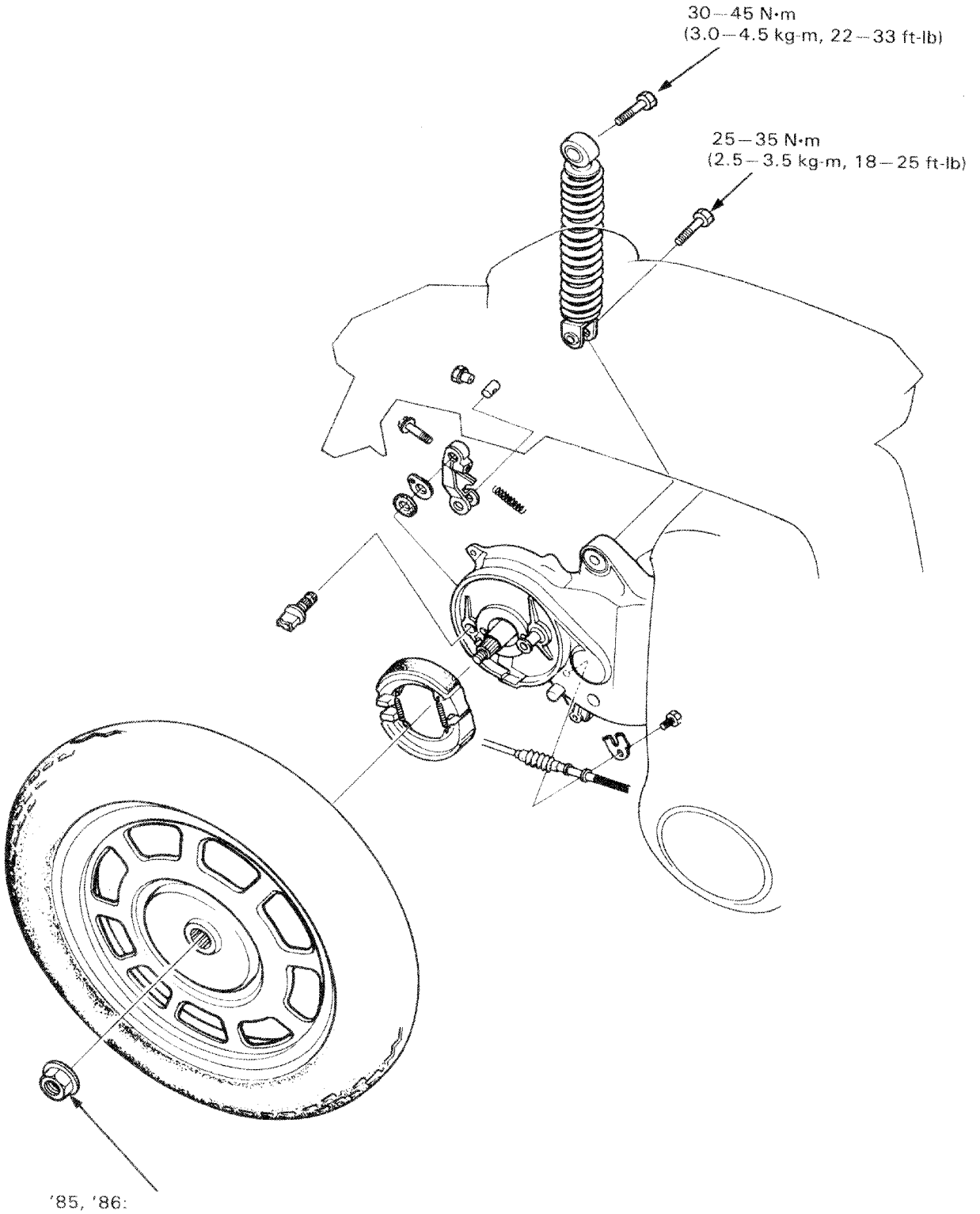
30—45 N·m
(3.0—4.5 kg-m, 22—33 ft-lb)
25—35 N·m
(2.5—3.5 kg-m, 18—25 ft-lb)
'85, '86:
80—100 N·m (8.0—10.0 kg-m, 58—72 ft-lb)
AFTER '86:
100—120 N·m (10.0—12.0 kg-m, 72—87 ft-lb)

14. REAR WHEEL/BRAKE/SUSPENSION

SERVICE INFORMATION	14-1	REAR BRAKE	14-3
TROUBLESHOOTING	14-1	REAR SUSPENSION	14-5
REAR WHEEL	14-2		

SERVICE INFORMATION

GENERAL

WARNING

- *Inhaled asbestos fibers have been found to cause respiratory disease and cancer. Never use an air hose or dry brush to clean brake or clutch assemblies. In the united states, use an OSHA-approved vacuum cleaner or alternate method approved by OSHA-designed to minimize the hazard caused by airborn asbestos fibers.*

- Refer to the Tubeless Tire Repair Manual for tire removal, repair, and remounting procedures.

SPECIFICATIONS

ITEMS	STANDARD	SERVICE LIMIT
Rear wheel rim runout	——	2.0 mm (0.08 in)
Rear brake drum I.D.	95.0 mm (3.74 in)	95.5 mm (3.76 in)
Rear brake lining thickness	4.0 mm (0.16 in)	2.0 mm (0.08 in)
Rear shock absorber spring free length A '85—'88:	45.0 mm (1.77 in)	43.7 mm (1.72 in)
AFTER '88:	45.9 mm (1.96 in)	44.5 mm (1.75 in)
B '85—'88:	183.2 mm (7.21 in)	177.7 mm (7.00 in)
AFTER 88:	183.1 mm (7.21 in)	177.6 mm (6.99 in)

TORQUE VALUES

Rear axle	'85, '86:	80—100 N•m (8.0—10.0 kg-m, 58—72 ft-lb)
	After '86:	100—120 N•m (10.0—12.0 kg-m, 72—87 ft-lb)
Rear shock absorber upper bolt		30—45 N•m (3.0—4.5 kg-m, 22—33 ft-lb)
Rear shock absorber lower bolt		25—35 N•m (2.5—3.5 kg-m, 18—25 ft-lb)

TOOLS

Special

Rear cushion attachment B	07967—GA70200 or 07967—GA70001
Spring attachment	07967—1180100

Common

Rear shock absorber compresor	07959-3290001

TROUBLESHOOTING

Rear wheel wobbling
- Bent rim
- Faulty tire
- Axle not tightened properly

Soft suspension
- Weak shock absorber spring

Poor brake performance
- Brake not adjusted properly
- Contaminated brake linings
- Worn brake linings
- Worn brake shoes at cam contact area
- Worn brake cam
- Worn brake drum
- Improper engagement between brake arm and cam-shaft serrations

REAR WHEEL

REAR WHEEL REMOVAL

Remove the right and left side covers (page 12-2).
Remove the exhaust muffler.

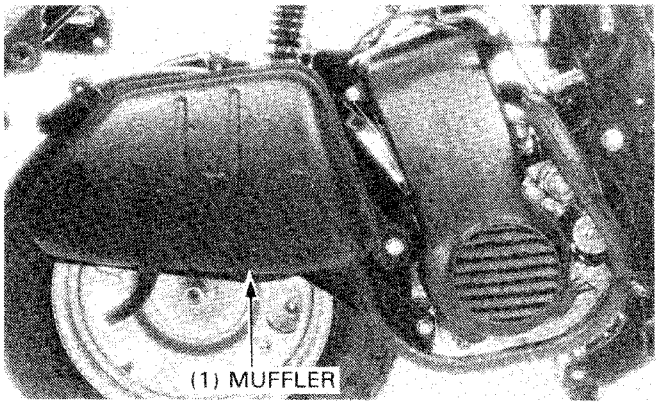

Remove the axle nut.
Remove the rear wheel.

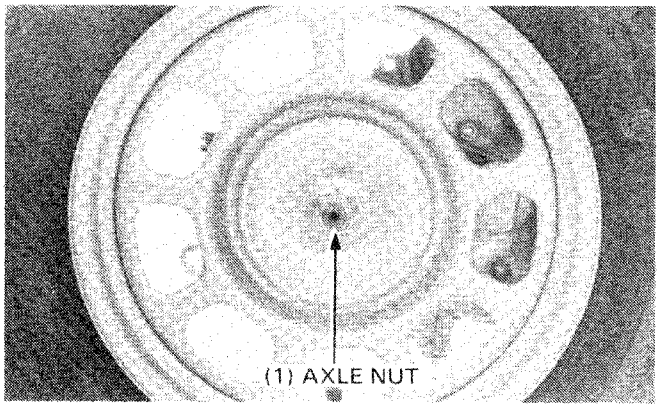

REAR WHEEL INSPECTION

Place the rear wheel in a truing stand.
Spin the wheel by hand and measure the rim runout using a dial indicator.

SERVICE LIMITS:
AXIAL: 2.0 mm (0.08 in)
RADIAL: 2.0 mm (0.08 in)

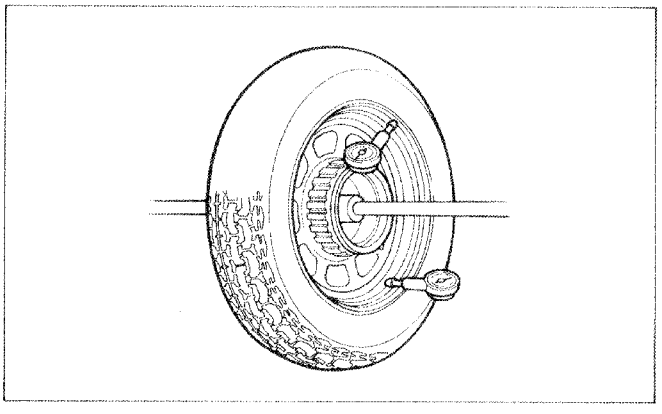

REAR WHEEL INSTALLATION

Install the rear wheel and tighten the axle nut.

TORQUE:
'85, '86: 80—100 N·m
(8.0—10.0 kg-m, 58—72 ft-lb)
After '86: 100—120 N·m
(10.0—12.0 kg-m, 72—87 ft-lb)

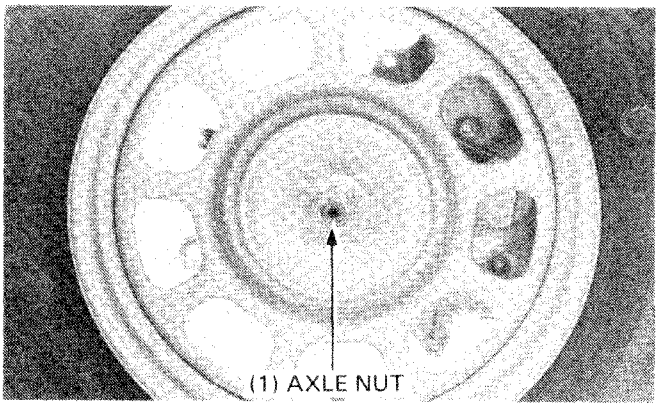

Install the exhaust muffler.

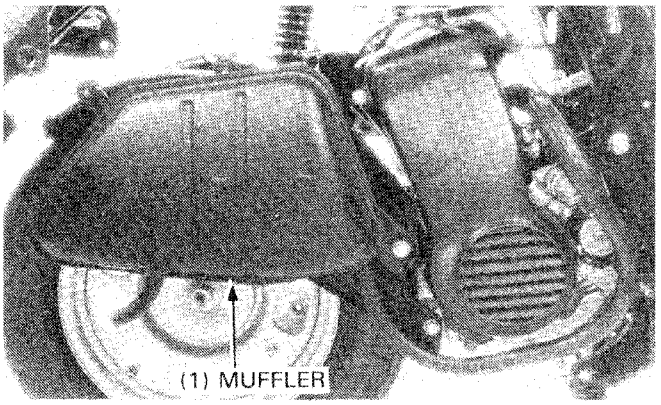

REAR BRAKE

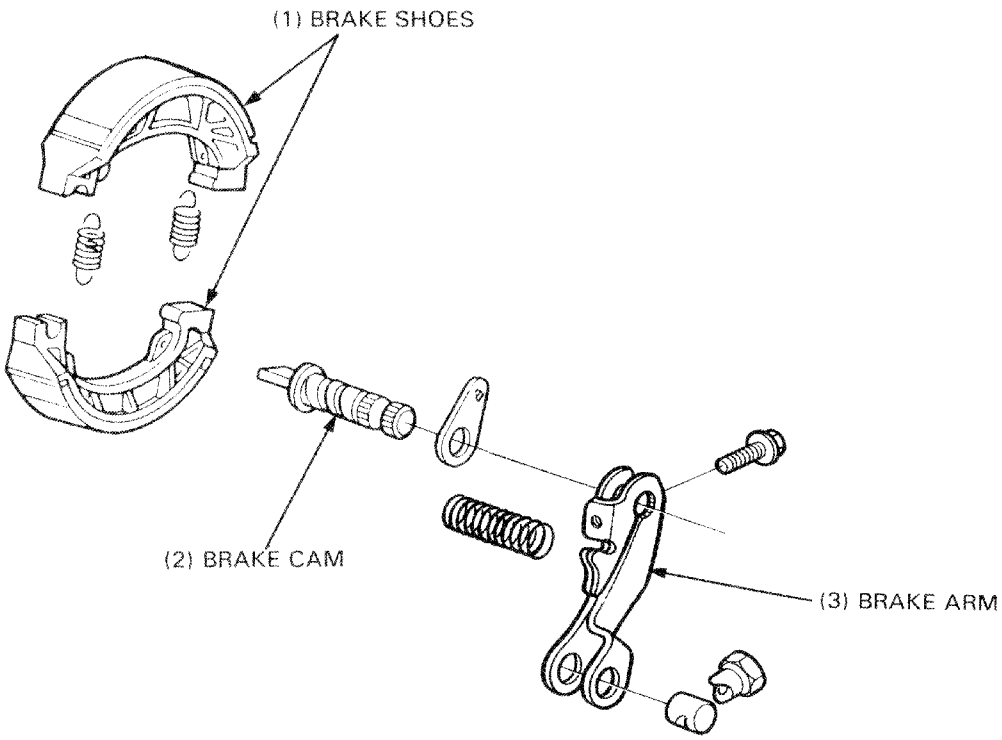

Remove the rear wheel (page 14-2).

REAR BRAKE DRUM INSPECTION

Measure the rear brake drum I.D.

SERVICE LIMIT: 95 mm (3.76 in)

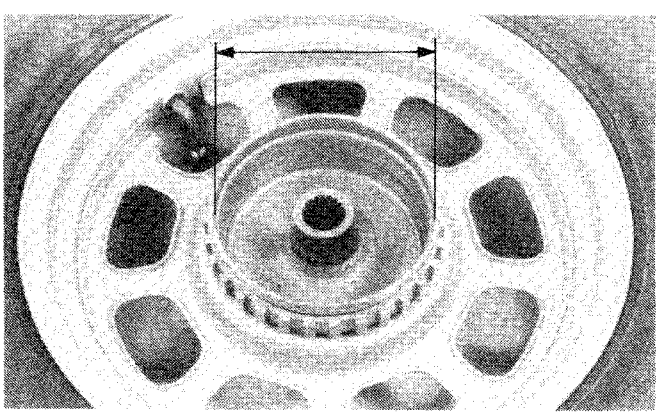

LINING INSPECTION

Measure the rear brake lining thickness.

SERVICE LIMIT: 2.0 mm (0.081n)

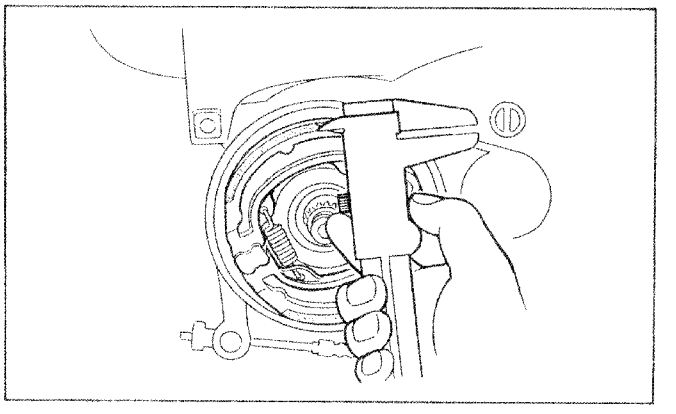

DISASSEMBLY

Remove the brake shoes.
Disconnect the brake cable.

WARNING

- *Keep grease off the brake linings. Wipe off excess grease.*

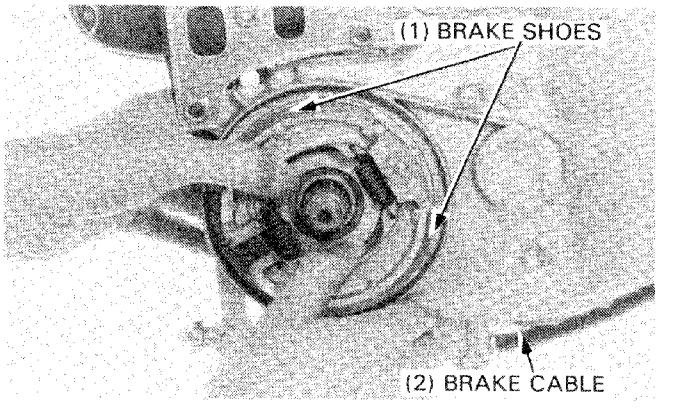

Remove the brake arm bolt.
Remove the brake arm, spring and indicator plate.
Remove the brake cam.

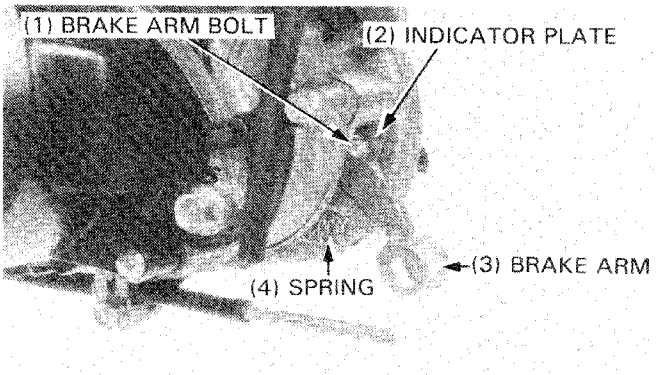

ASSEMBLY

Apply grease sparingly to the brake shoe contacting area of the anchor pin.
Apply grease sparingly to the brake cam and install it.

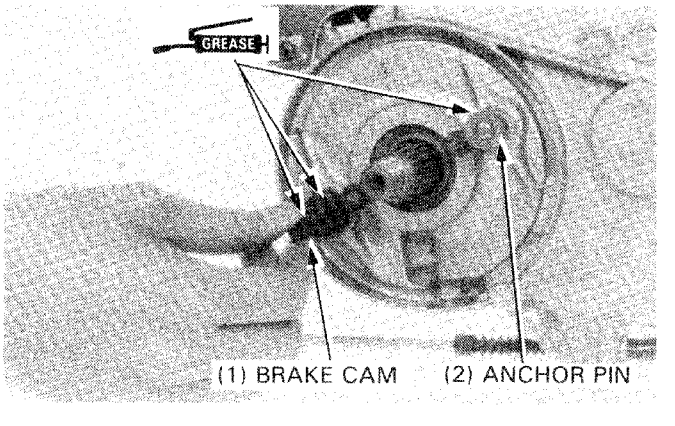

Install the indicator plate.
Install the brake arm.

NOTE

- Align the slit marks on the brake arm and brake cam.

Tighten the brake arm bolt.

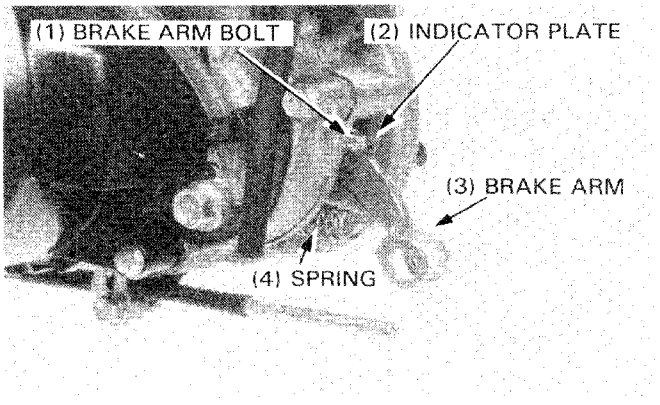

Install the brake shoes with the shoe springs.
Connect the rear brake cable.
Install the rear wheel (page 14-2).
Adjust the rear brake (page 3-9).

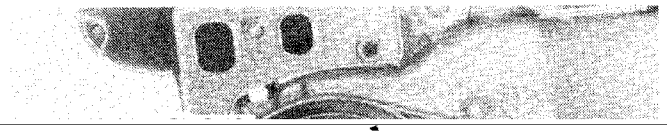

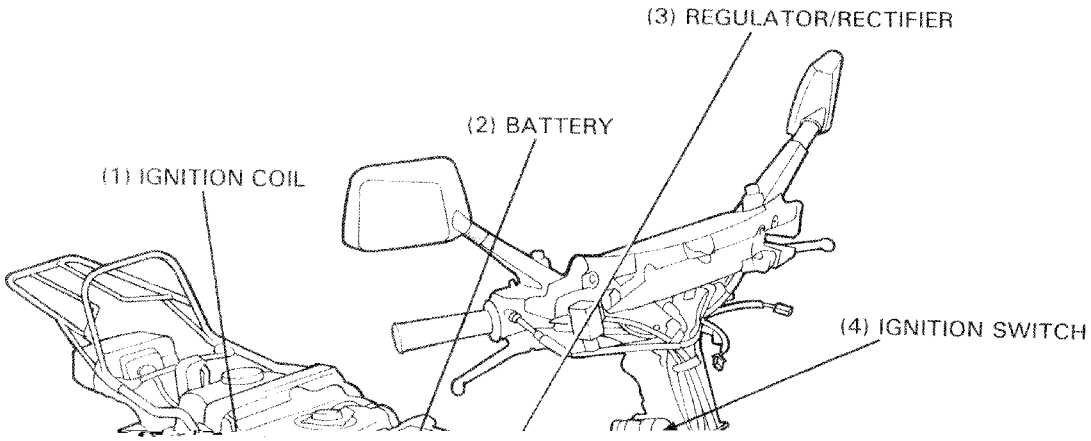
(3) REGULATOR/RECTIFIER
(2) BATTERY
(1) IGNITION COIL
(4) IGNITION SWITCH

15. ELECTRICAL EQUIPMENT

TORQUE VALUES

Ignition coil bolt	5—9 N•m (0.5—0.9 kg-m, 4—7 ft-lb)
Horn	20—24 N•m (2.0—2.4 kg-m, 14—17 ft-lb)
License plate base	0.5—1.5 N•m (0.05—0.15 kg-m, 0.4—1.1 ft-lb)

TOOL

Common

Digital Multimeter	KS-AHM-32-003 (U.S.A. only) or 07308—0020000

TROUBLESHOOTING

CHARGING SYSTEM

No power - key turned on
- Dead battery
- Disconnected battery cable
- Main fuse burned out
- Faulty ignition switch

Low power - key turned on
- Weak battery
- Loose battery connection

Low power - engine running
- Battery undercharged
- Charging system failure
- Loose connection or short circuit in lighting system

Intermittent power
- Loose battery connection
- Loose charging system connection
- Loose starting system connection

Charging system failure
- Loose, broken, or shorted wire or connection
- Faulty regulator/rectifier
- Faulty alternator

IGNITION SYSTEM

No spark at plug
- **Poorly connected, broken or shorted wire**
  - Between ignition pulse generator and ignition control module
  - Between ignition control module and ignition coil

Ignition secondary circuit
- Faulty ignition coil
- Faulty spark plug
- Faulty spark plug wire

ELECTRICAL EQUIPMENT

REGULATOR/RECTIFIER

Remove the frame center cover (Section 12).
Remove the frame side cover (Section 12).
Disconnect the regulator/rectifier coupler.

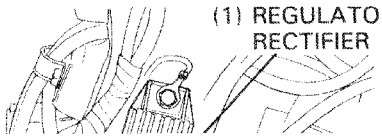

IGNITION SYSTEM

IGNITION CONTROL MODULE

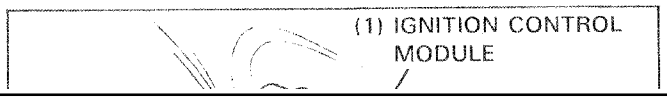

Remove the frame center cover (Section 12)

INSPECTION

Connect the battery positive terminal to the motor terminal and negative to the motor body.

SWITCHES

IGNITION SWITCH

INSPECTION

Open the trunk.
Remove the maintenance lid and disconnect the switch coupler. Check for continuity between the terminals.
Continuity should exist between the circles (O—O) in the table below.

IGNITION SWITCH

TERMINAL / POSITION	BAT 1	BAT 2	IG	E
ON	O—O			
OFF			O—O	
COLOR	R	Bl	Bl/W	G

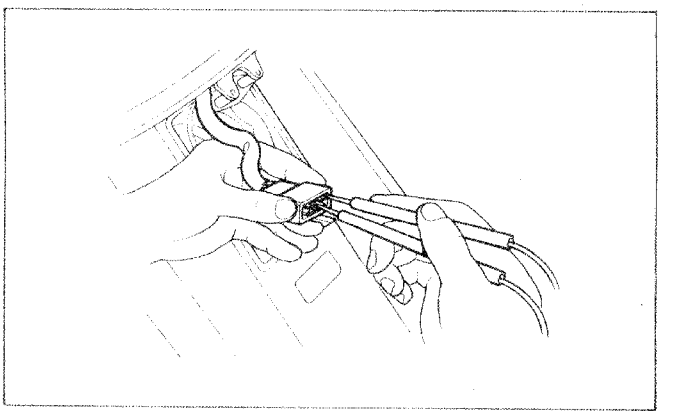

REPLACEMENT

Remove the following:
— trunk (page 12-3).
— leg shield (page 12-4).
Replace the ignition switch by removing the two mounting bolts.

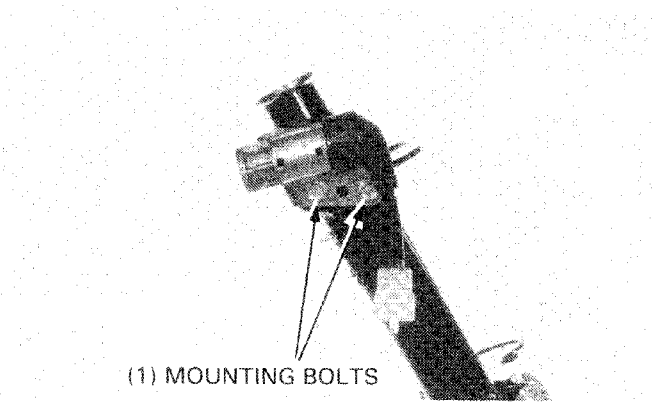

SWITCHES

Open the trunk and remove the maintenance lid.
Disconnect the switch coupler. Check for continuity between the terminals.

Continuity should exist between the circles (O—O) in the tables below.

TURN SIGNAL SWITCH

TERMINAL / POSITION	W	R	L
R	O—O		
PUSH (N)			
N			
L	O———O		
COLOR	Gr	Lb	O

DIMMER SWITCH

TERMINAL / POSITION		HL	Hi	Lo
ON	Hi	O—O		
	(N)	O—O—O		
	Lo	O———O		
COLOR		Br	Bu	W

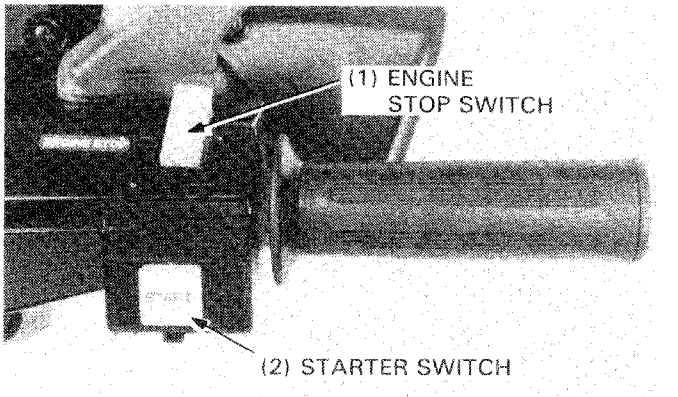

HORN SWITCH

TERMINAL / POSITION	Ho	BAT 2
FREE		
PUSH	O—O	
COLOR	Lg	Bl

STARTER SWITCH

TERMINAL / POSITION	ST	E
FREE		
PUSH	O—O	
COLOR	Y/R	G

ENGINE STOP SWITCH

TERMINAL / POSITION	E	IG
RUN		
OFF	O—O	
COLOR	G	Bl/W

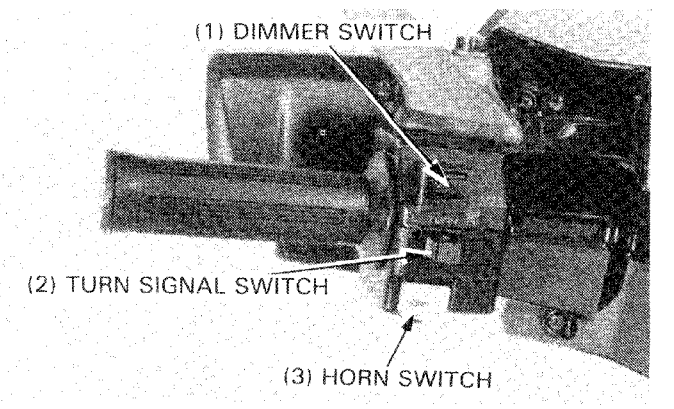

FRONT/REAR BRAKE LIGHT SWITCH

The switch is normal if there is continuity between the black and green/yellow wires when the front brake lever is applied. Replace the switch if it is faulty.

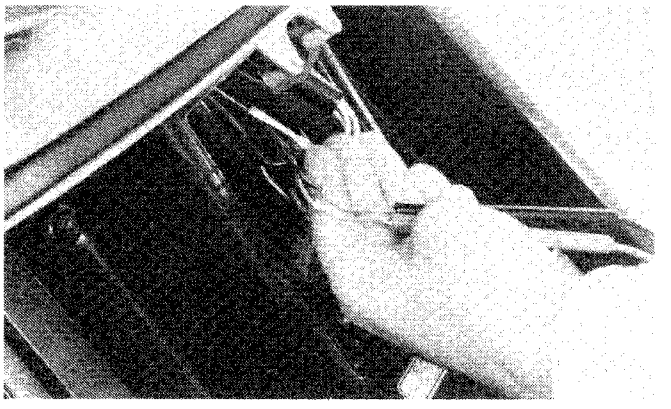

FUEL UNIT/GAUGE

FUEL UNIT INSPECTION

Remove the fuel unit from the fuel tank (page 4-12).
Measure the resistances between the fuel unit wire terminals with the float in the UPPER (FULL) and LOWER (EMPTY) positions.

SPECIFICATIONS:

FLOAT POSITION	RESISTANCE
UPPER (FULL)	4—10 Ω
LOWER (EMPTY)	90—100 Ω

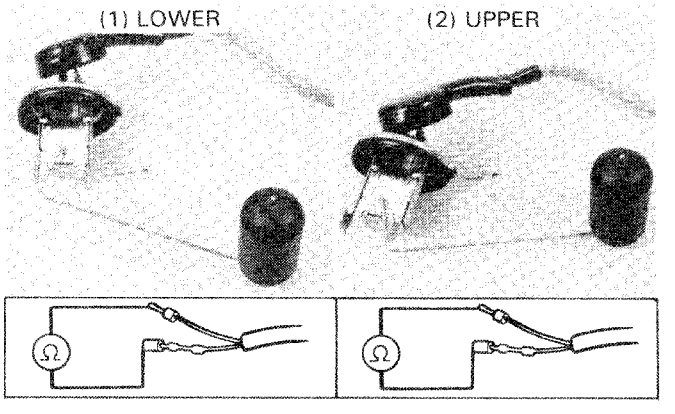

FUEL GAUGE INSPECTION

Connect the fuel unit wire connectors and turn the ignition switch ON.

NOTE

- Before performing the following test, operate the turn signals to determine that the battery circuit is normal.

Check the gauge needle for correct indication by moving the float up and down.

FLOAT POSITION	NEEDLE POSITION
UPPER (FULL)	"F" (FULL)
LOWER (EMPTY)	"E" (EMPTY)

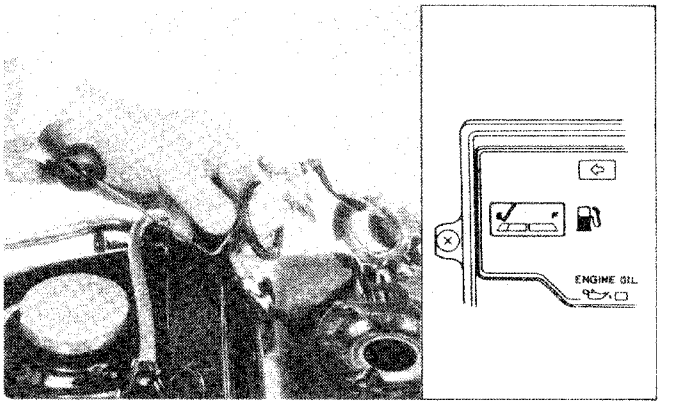

HORN

REMOVAL

Remove the mount bolts.
Disconnect the horn connectors.

INSTALLATION

Install the horn in the reverse order of removal.

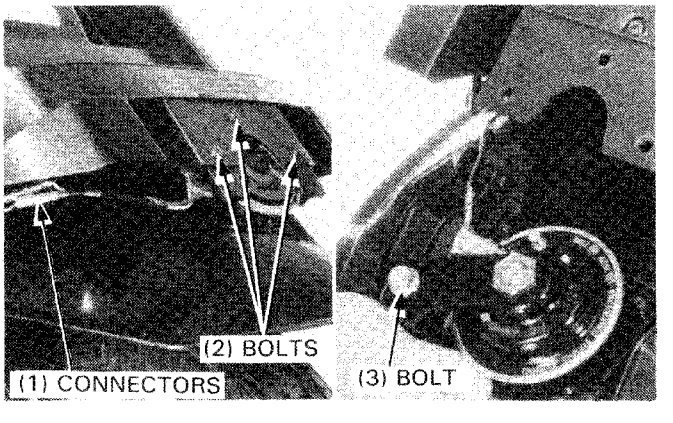

RESISTOR

REMOVAL

Remove the resistor from the frame.

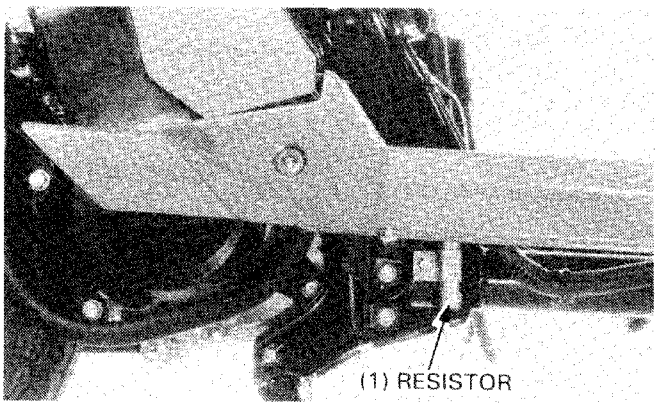

INSPECTION

Measure the resistance between the resistor wire and resistor body.

RESISTANCE: 2.5–3.5 Ω

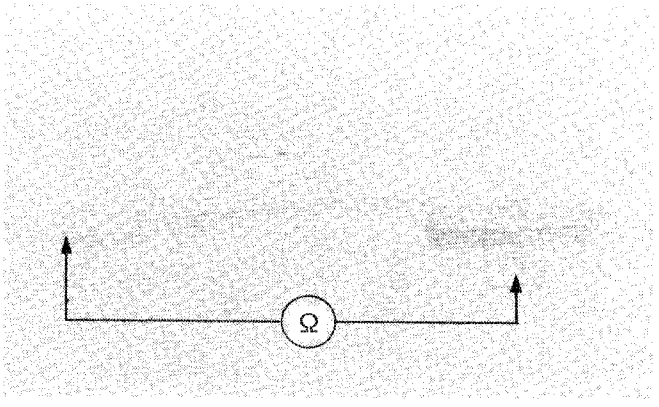

TAILLIGHT/REAR TURN SIGNAL LIGHT

REMOVAL

Remove the left and right rear covers (page 12-2).
Remove the wire harness from the clamp and pull back the connector cover.
Disconnect the taillight/turn signal light connectors.

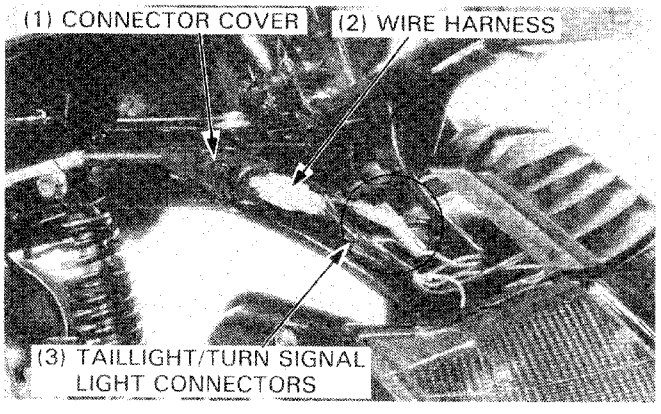

Remove the taillight/rear turn signal light by removing the two nuts.

INSTALLATION

Install the taillight/rear turn signal light in the reverse order of removal.

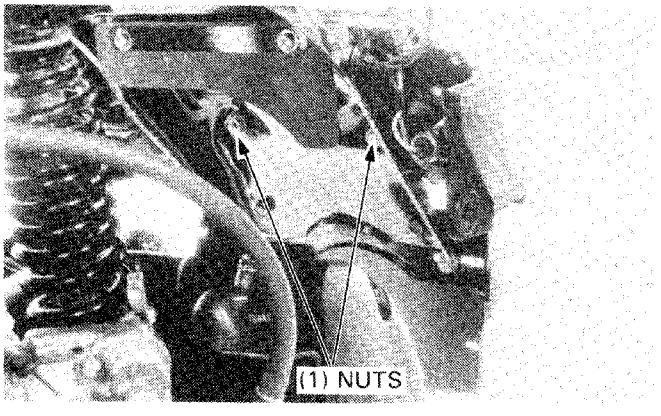

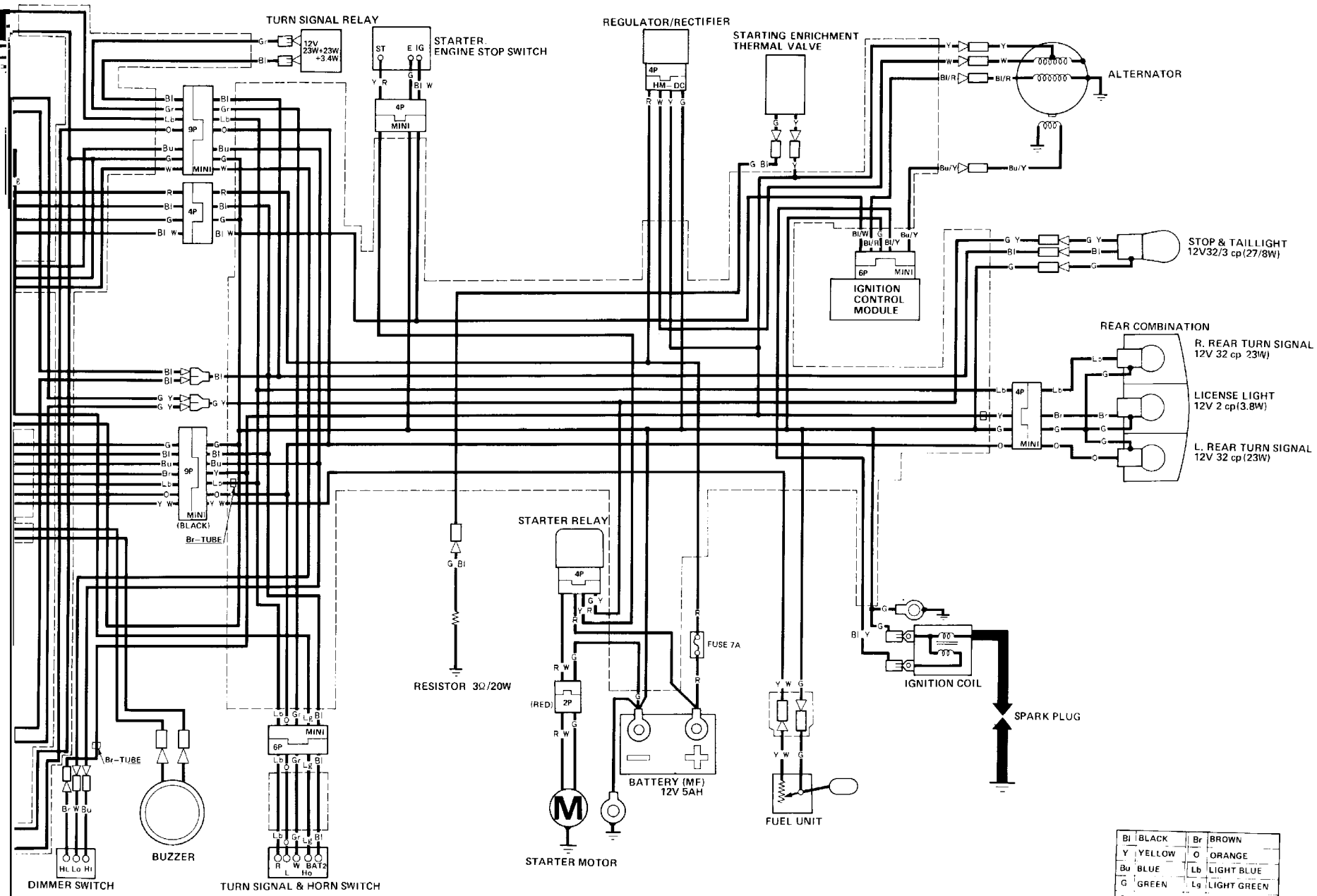

Bl	BLACK	Br	BROWN
Y	YELLOW	O	ORANGE
Bu	BLUE	Lb	LIGHT BLUE
G	GREEN	Lg	LIGHT GREEN
R	RED	P	PINK
W	WHITE	Gr	GRAY

CH

	IG	E
)		
	○	○
	Bl/W	G

HORN SWITCH

	Ho	BAT 2
FREE		
PUSH	○	○
COLLOR	Lg	Bl

DIMMER SWITCH

	HL	Hi	Lo
Hi	○	○	
ON (N)	○	○	○
Lo	○		○
COLLOR	Br	Bu	W

STARTER SWITCH

	ST	E
FREE		
PUSH	○	○
COLLOR	Y/R	G

ENGINE STOP SWITCH

	E	IG
RUN		
OFF	○	○
COLLOR	G	Bl/W

0030Z-GE1-6700

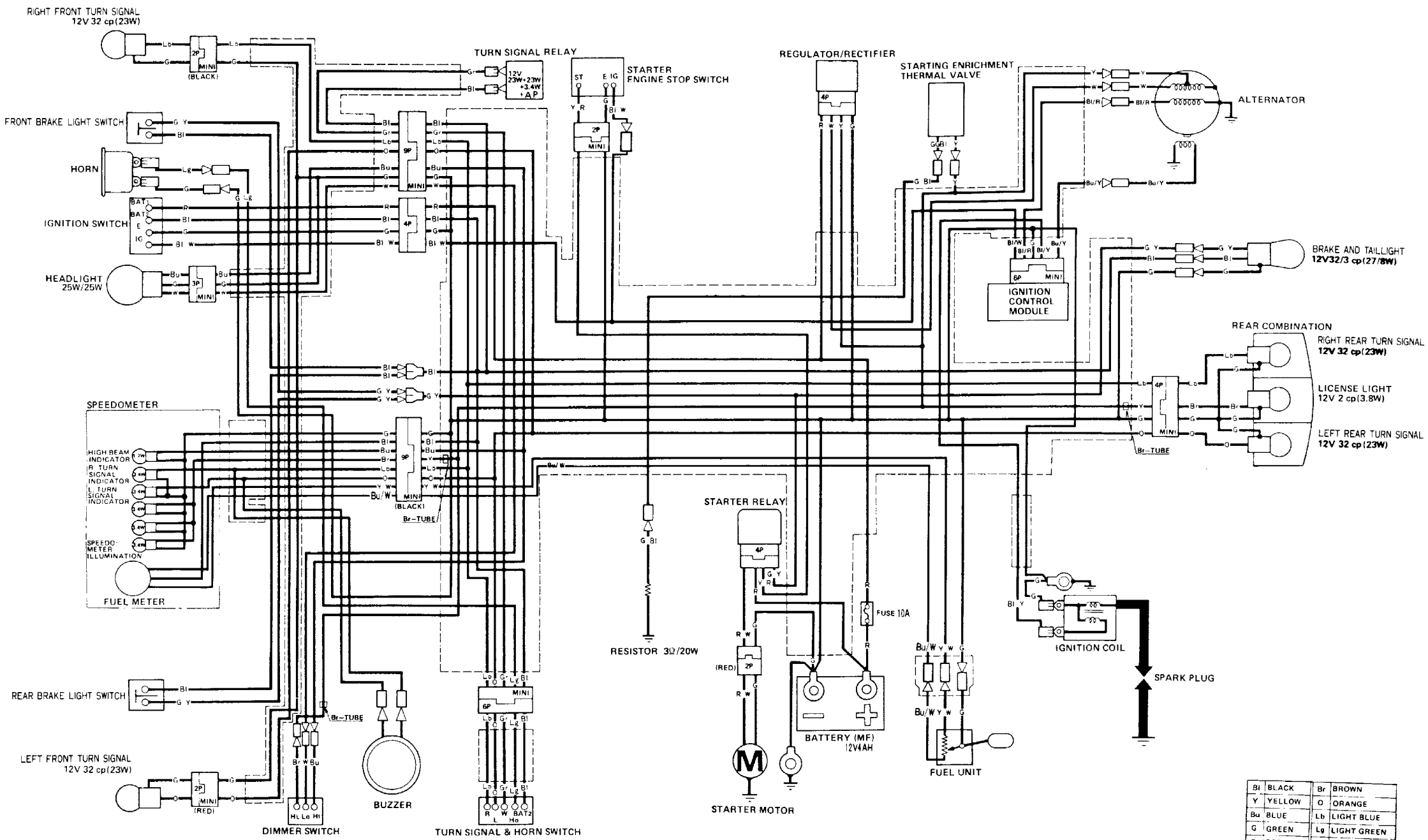

Bl	BLACK	Br	BROWN
Y	YELLOW	O	ORANGE
Bu	BLUE	Lb	LIGHT BLUE
G	GREEN	Lg	LIGHT GREEN
R	RED	P	PINK
W	WHITE	Gr	GRAY

TURN SIGNAL SWITCH

	W	R	L
R	○	○	
PUSH (N)			
N			
L	○		○
COLOR	Gr	Lb	O

IGNITION SWITCH

	BAT 1	BAT 2	IG	E
ON	○	○		
OFF			○	○
COLLOR	R	Bl	Bl/W	G

HORN SWITCH

	Ho	BAT 2
FREE		
PUSH	○	○
COLLOR	Lg	Bl

DIMMER SWITCH

		HL	Hi	Lo
ON	Hi	○	○	
	(N)	○	○	○
	Lo	○		○
COLLOR		Br	Bu	W

STARTER SWITCH

	ST	E
FREE		
PUSH	○	○
COLLOR	Y/R	G

ENGINE STOP SWITCH

	E	IG
RUN		
OFF	○	○
COLLOR	G	Bl/W

0030Z-GE1-7700

AFTER '86:

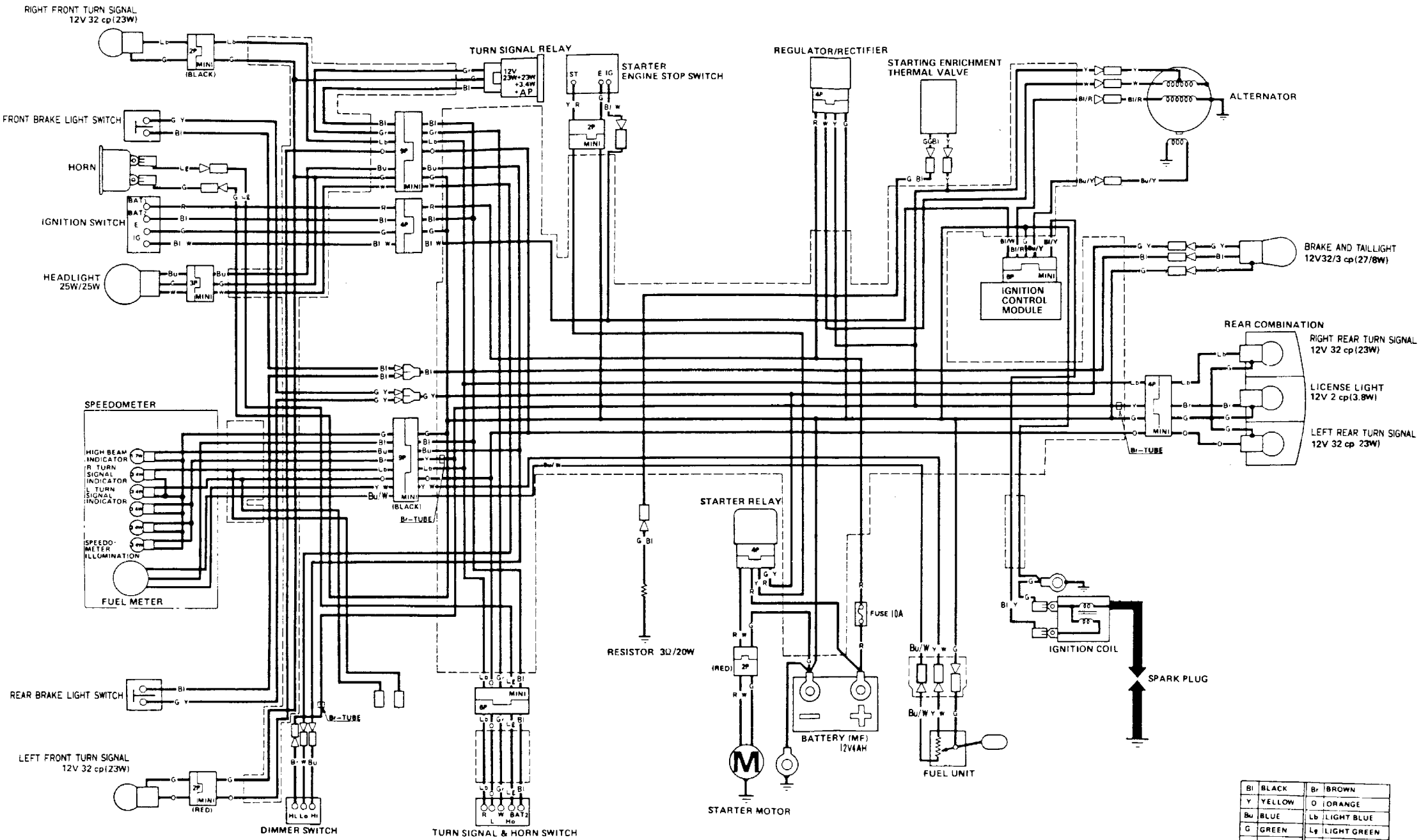

Bl	BLACK	Br	BROWN
Y	YELLOW	O	ORANGE
Bu	BLUE	Lb	LIGHT BLUE
G	GREEN	Lg	LIGHT GREEN
R	RED	P	PINK
W	WHITE	Gr	GRAY

TURN SIGNAL SWITCH

	W	R	L
R	○	○	
PUSH (N)			
N			
L	○		○
COLOR	Gr	Lb	O

IGNITION SWITCH

	BAT 1	BAT 2	IG	E
ON	○	○		
OFF			○	○
COLLOR	R	Bl	Bl/W	G

HORN SWITCH

	Ho	BAT 2
FREE		
PUSH	○	○
COLLOR	Lg	Bl

DIMMER SWITCH

		HL	Hi	Lo
ON	Hi	○	○	
	(N)	○	○	○
	Lo	○		○
COLLOR		Br	Bu	W

STARTER SWITCH

	ST	E
FREE		
PUSH	○	○
COLLOR	Y/R	G

ENGINE STOP SWITCH

	E	IG
RUN		
OFF	○	○
COLLOR	G	Bl/W

0030Z–GE1–8300

0030Z-GE1-8300
0030Z-GV4-A400 NEW

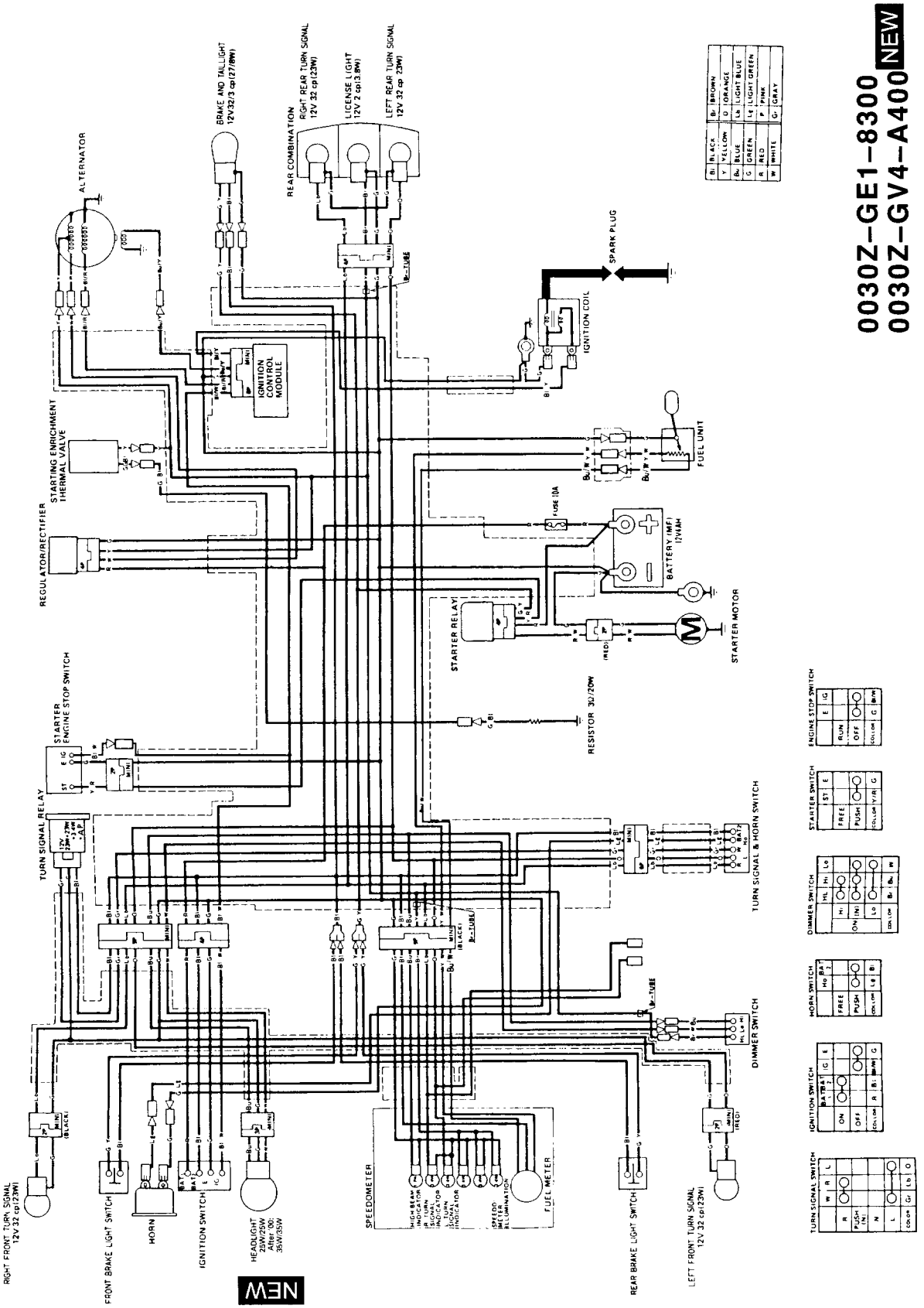

AFTER '86:

© 2000 American Honda Motor Co., Inc. - All Rights Reserved

ENGINE DOESN'T START OR IS HARD TO START	17-1	HANDLING	17-5
ENGINE LACKS POWER	17-2	POOR SUSPENSION PERFORMANCE	17-5
POOR PERFORMANCE AT LOW AND IDLE SPEEDS	17-3	POOR BRAKE PERFORMANCE	17-5
POOR PERFORMANCE AT HIGH SPEED	17-3	FUEL GAUGE	17-6
ENGINE NOISE	17-4	STARTER MOTOR	17-7
CLUTCH, DRIVE AND DRIVEN PULLEYS	17-4	UNDER CHARGE/OVER CHARGE OF THE BATTERY	17-8
		NO SPARK AT PLUG	17-9

ENGINE DOES NOT START OR IS HARD TO START

		Probable cause
1. Check that fuel is getting to carburetor by loosening drain screw GETTING TO CARBURETOR	NOT GETTING TO CARBURETOR	(1) No fuel in tank (2) Clogged fuel tube to carburetor, vacuum tube to intake pipe (3) Clogged fuel valve (4) Clogged float valve (5) Clogged fuel tank cap breather hole (6) Clogged fuel filter (7) Clogged fuel strainer
2. Try spark test SPARK JUMPS	WEAK OR NO SPARK	(1) Faulty spark plug (2) Fouled spark plug (3) Faulty ignition control module (4) Faulty ignition pulse generator (5) Broken or shorted spark plug (6) Broken or shorted ignition coil (7) Faulty ignition switch
3. Test cylinder compression NORMAL COMPRESSION	LOW COMPRESSION	(1) Valve clearance too small (2) Improper valve and seat contact (3) Worn cylinder and piston rings (4) Valve stuck open (5) Seized valve (6) Improper valve timing (7) Leaking cylinder head gasket
4. Start by following normal starting procedure ENGINE DOES NOT FIRE	ENGINE FIRES BUT SOON STOPS	(1) Faulty auto bystarter (2) Intake pipe leaking (3) Improper ignition timing (4) Faulty fuel valve
5. Remove the spark plug DRY	WET PLUG	(1) Carburetor flooded (2) Faulty starting enrichment thermal valve (3) Throttle valve open excessively (4) Air cleaner dirty

ENGINE LACKS POWER

		Probable cause
1. Accelerate lightly ENGINE SPEED INCREASES	ENGINE SPEED DOES NOT INCREASE SUFFICIENTLY →	(1) Clogged air cleaner (2) Restricted fuel flow (3) Clogged fuel tank breather hole (4) Clogged muffler (5) Faulty starting enrichment thermal valve (6) Damaged carburetor vacuum piston diaphragm
2. Check ignition timing CORRECT	INCORRECT →	(1) Faulty ignition control module (2) Faulty ignition pulse generator
3. Check valve clearance CORRECT	INCORRECT →	(1) Improper valve clearance adjustment (2) Worn valve seat
4. Test cylinder compression NORMAL	TOO LOW →	(1) Improper valve and seat contact (2) Worn cylinder and piston rings (3) Leaking cylinder head gasket (4) Flaws in cylinder head (5) Improper valve timing
5. Check carburetor for clogging NOT CLOGGED	CLOGGED →	Carburetor not serviced frequently enough
6. Remove spark plug NOT FOULED OR DISCOLORED	FOULED OR DISCOLORED →	(1) Plug not serviced frequently enough (2) Use of plug with improper heat range
7. Check oil level and condition CORRECT AND NOT CONTAMINATED	INCORRECT OR CONTAMINATED →	(1) Oil level too high (2) Oil level too low (3) Oil not changed
8. Remove cylinder head oil pipe bolt and inspect lubrication system VALVE TRAIN LUBRICATED PROPERLY	VALVE TRAIN NOT LUBRICATED PROPERLY →	(1) Clogged oil pipe (2) Faulty oil pump
9. Check for engine overheating NOT OVERHEATING	OVERHEATING →	(1) Insufficient coolant (2) Thermostat stuck closed (3) Worn cylinder and piston rings (4) Lean mixture (5) Fuel contaminated (6) Excessive carbon build-up in combustion chamber (7) Ignition timing too advanced
10. Accelerate or run at high speed ENGINE DOES NOT KNOCK	ENGINE KNOCKS →	(1) Excessive carbon build-up in combustion chamber (2) Use of poor quality fuel (3) Clutch slipping (4) Lean mixture (5) Ignition timing too advanced

POOR PERFORMANCE AT LOW AND IDLE SPEEDS

		Probable cause
1. Check ignition timing	INCORRECT →	(1) Faulty ignition control module (2) Faulty ignition pulse generator
CORRECT ↓		
2. Check carburetor air screw adjustment	INCORRECT →	(1) Fuel air mixture too rich or too lean (preform air screw adjustment)
CORRECT ↓		
3. Check for leaking intake pipe	LEAKING →	(1) Deteriorated O-ring (2) Loose carburetor (3) Damaged insulator rubber (4) Air leaking past intake pipe vacuum joint
NOT LEAKING ↓		
4. Perform spark test	WEAK OR INTERMITTENT SPARK →	(1) Faulty, carbon or wet fouled spark plug (2) Faulty ignition control module (3) Faulty ignition pulse generator (4) Faulty ignition coil (5) Broken or shorted spark plug wire (6) Faulty ignition switch
GOOD SPARK		

POOR PERFORMANCE AT HIGH SPEED

1. Check ignition timing	INCORRECT →	(1) Faulty ignition control module (2) Faulty ignition pulse generator
CORRECT ↓		
2. Check valve clearance	INCORRECT →	(1) Improper valve clearance adjustment (2) Worn valve seat
CORRECT ↓		
3. Disconnect fuel tube at automatic fuel valve	FUEL FLOW RESTRICTED →	(1) No fuel in fuel tank (2) Clogged fuel tube or filter (3) Clogged fuel tank cap breather hole (4) Faulty fuel valve
FUEL FLOWS FREELY ↓		
4. Remove carburetor and check for clogged jet	CLOGGED →	Clean
NOT CLOGGED ↓		
5. Check valve timing	INCORRECT →	Cam sprocket aligning marks not aligned
CORRECT ↓		
6. Check valve spring tension	WEAK →	Faulty spring
NOT WEAKENED		

ENGINE NOISE

	Probable cause
1. Valve noise	(1) Valve clearance too large (2) Worn rocker arm and/or camshaft
2. Piston noise	(1) Worn piston and cylinder (2) Worn piston pin and connecting rod small end
3. Cam chain noise	(1) Damaged cam chain tensioner (2) Worn cam sprocket teeth (3) Worn or damaged cam chain (4) Damaged tensioner push rod
4. Crankshaft noise	(1) Worn main journal bearing (2) Worn crank pin bearing
5. Gear noise	(1) Worn or damaged final reduction gears (2) Worn final reduction gear shaft splines

CLUTCH, DRIVE AND DRIVEN PULLEYS

1. Engine starts, but scooter does not move	(1) Worn or slipping drive belt (2) Broken ramp plate (3) Broken drive face spring (4) Separated clutch lining (5) Damaged driven pulley shaft splines (6) Damaged transmission (7) Seized transmission
2. Scooter creeps or engine starts but soon stops	(1) Broken shoe spring (2) Clutch outer and clutch weight stuck (3) Seized pivot
3. Engine lacks power at start of a grade	(1) Worn or slipping drive belt (2) Worn weight rollers (3) Seized drive pulley bearings (4) Weak driven face spring (5) Worn or seized driven pulley bearings
4. Engine lacks power at high speed	(1) Worn or slipping drive belt (2) Worn weight rollers (3) Worn driven pulley bearings
5. There is abnormal noise or smell while running	(1) Oil or grease on drive belt. (2) Worn drive belt (3) Weak driven face spring (4) Worn or seized driven pulley bearings

HANDLING

		Probable cause
Check tire pressure	INCORRECT →	Adjust tire pressure
CORRECT		
1. Steering is heavy →		(1) Top cone race too tight (2) Damaged steering stem balls
2. Either wheel is wobbling →		(1) Excessive wheel bearing play (2) Bent rim (3) Loose axle nut
3. Scooter pulls to one side →		(1) Misaligned front and rear wheels (2) Bent front fork

POOR SUSPENSION PERFORMANCE

Check tire pressure	INCORRECT →	Adjust tire pressure
CORRECT		
1. Suspension is too soft →		(1) Weak shock spring (2) Excessive load (3) Shock damper oil leaking
2. Suspension is too hard →		Bent fork tube or shock rod
3. Suspension is noisy →		(1) Fork slider and tube binding (2) Fork slider and spring binding (3) Damaged shock stopper rubber (4) Loose steering stem nut

POOR BRAKE PERFORMANCE

Check brake free play	INCORRECT →	Adjust brake
CORRECT		
1. Wear indicator arrow aligns with index mark on brake panel →		(1) Worn brake linings (2) Worn brake cam (3) Worn brake cam contacting area of brake shoes (4) Worn brake durm
2. Brake squeaks →		(1) Worn brake linings (2) Foreign matter on brake linings (3) Rough shoe contacting face of brake drum
3. Brake performance is poor →		(1) Faulty or elongated brake cables (2) Brake shoes improperly contact brake drum (3) Mud or water in brake drum (4) Grease or oil on brake linings

FUEL GAUGE

POINTER DOES NOT REGISTER CORRECTLY (IGNITION SWITCH ON)

		Probable cause
1. Check battery circuit by operating turn signals	SIGNALS DIM, REMAIN ON OR DON'T OPERATE AT ALL →	(1) Blown fuse (2) Weak or dead battery (3) Faulty ignition switch (4) Loose or disconnected connectors (5) Open circuit
SIGNALS OPERATED PROPERLY ↓		
2. Remove fuel unit from tank and check operation of pointer by moving float Float up: Pointer at FULL Float down: Pointer at EMPTY	POINTER MOVES →	Faulty float
POINTER DOES NOT MOVE ↓		
3. Check operation of pointer by opening and shorting fuel unit terminal on harness side	POINTER MOVES →	Open or shorted fuel unit
POINTER DOES NOT MOVE ↓		
4. Check for loose, open or incorrect connections	INCORRECT →	(1) Disconnected connector (2) Incorrectly connected connector
CORRECT →		Open or shorted circuit in meter

POINTER FLUCTUATES OR SWINGS (IGNITION SWITCH ON)

1. Check battery circuit by operating turn signals	SIGNALS DIM, REMAIN ON OR DON'T OPERATE AT ALL →	(1) Blown fuse (2) Weak or dead battery (3) Open or shorted ignition switch (4) Loose or open connections (5) Open circuit
SIGNALS OPERATED PROPERLY ↓		
2. Remove fuel unit from tank and check operation of pointer by moving float	POINTER DOES NOT MOVE IN ACCORDANCE WITH FLOAT →	Poor contact in fuel unit
POINTER MOVES IN ACCORDANCE WITH FLOAT ↓		
3. Check each connector	INCORRECT →	Loose or open connections
CORRECT →		Open or shorted circuit in meter

STARTER MOTOR

STARTER MOTOR WILL NOT TURN

		Probable cause
1. Check operation of brake light switch by applying brake	DOES NOT COME ON →	(1) Blown fuse (2) Weak or dead battery (3) Faulty brake light switch (4) Disconnected terminals (5) Open or shorted ignition switch
COMES ON ↓		
2. Check battery circuit by operating turn signals	SIGNALS DIM, REMAIN ON OR DON'T OPERATE AT ALL →	Dead battery
SIGNALS OPERATED PROPERLY ↓		
3. Check operation of starter relay by depressing starter button	RELAY DOESN'T OPERATE →	(1) Poorly contacted starter switch (2) Open or shorted starter relay (3) Loose terminals
RELAY OPERATES PROPERLY ↓		
4. Directly connect starter motor to battery	STARTER MOTOR DOESN'T TURN →	(1) Worn brushes (2) Open or shorted wires of rotor (3) Open starter motor cable (4) Loose terminals
STARTER TURNS →		Open wire harness

STARTER MOTOR TURNS SLOWLY

1. Check battery circuit by operating turn signals	SIGNALS DIM, REMAIN ON OR DON'T OPERATE →	Weak or dead battery
SIGNALS OPERATED PROPERLY ↓		
2. Directly connect starter motor cable to battery	STARTER TURNS NORMALLY →	(1) Loose connector or terminal (2) Poor contact in starter relay (3) Faulty starter clutch
STARTER MOTOR TURNS SLOWLY ↓		
3. Rotate crankshaft	HEAVY →	Seized engine
LIGHT →		Faulty starter motor

STARTER MOTOR WON'T STOP TURNING

1. Turn ignition switch OFF	STOPPED →	Faulty starter clutch
NOT STOPPED →		Starter relay shorted or stuck closed

UNDER CHARGE/OVER CHARGE BATTERY

NOTE: Make sure that the battery is in good condition, use a known-good battery if necessary.

		Probable cause
1. Test the battery for leaks.	LEAKE →	• Shorted wire harness • Faulty main switch
NO LEAKES ↓		
2. Start the engine and check the regulated voltage at the battery terminals.	STANDARD (14–15 V) →	• Faulty regulator/rectifier
	HIGHTER THAN STANDARD →	• Faulty battery • Battery dead
VOLTAGE DOES NOT RISE FROM THE BATTERY VOLTAGE ↓		
3. Check the regulator/rectifier connector for loose connection.	ABNORMAL →	• Poor contact
NORMAL ↓		
4. Measure the voltage between the Red (+) and Green (–) terminals of the regulator/rectifier connector.	NO VOLTAGE →	• Open circuit in Red and/or Green wire (S). • Poor ground • Brown fuse
BATTERY VOLTAGE ↓		
5. Disconnect the regulator/rectifier coupler and measure the resistance between the White and Green terminals at the disconnected connector.	OUT OF STANDARD VALUE →	• Open circuit in White wire
STANDARD (0.3–1.5 Ω) ↓		
6. Disconnect the alternator connectors and measure the resistance of the charging coil (Green and ground).	OUT OF STANDARD VALUE →	• Faulty charging coil
STANDARD (0.3–1.5 Ω) →		• Faulty regulator/rectifier

NO SPARK AT PLUG

		Probable cause
1. Replace the spark plug with a known-good spark plug and recheck.	GOOD SPARK →	• Faulty original spark plug
WEAK OR NO SPARK ↓		
2. Check the hightension wire is securely connected to spark plug cap.	LOOSE CONNECTION →	• Spark plug cap loosely installed
SECURE CONNECTION ↓		
3. Check the ignition control module coupler for loose connection.	ABNORMAL →	• Poor contact
NORMAL ↓		
4. Disconnect the ignition control module coupler and check the continuity and resistance between the each terminals according to the table below.	NORMAL →	• Faulty ignition control module

ABNORMAL ↓

ITEM		MEASURE AT:	JUDGEMENT
Main switch		Bl/W-G/W	There should be continuity with the ignition switch turned OFF
Exciter coil		Bl/R-G/W	800—1,200 Ω
Ignition pulse generator		Bu/Y-G/W	50—200 Ω
Ignition coil	Primary	Bl/Y-G/W	0.1—0.3 Ω
	Secondary	Bl/Y-Plug cap	3.7—4.5 Ω

5. Check the faulty circuit. ABNORMAL →
- Faulty exsiter coil
- Faulty ignition pulse generator coil
- Faulty ignition coil
- Faulty ignition switch
- Faulty engine stop switch

NORMAL ↓ →
- Open circuit in wire harness
- Poor contact of connectors

Air Cleaner 3-5
Housing 4-15
Screw 4-10
Alternator 10-1
Installation 10-3
Removal 10-2
Starting Enrichment Thermal Valve 4-3
Automatic Fuel Valve 4-12
Battery 15-3
Belt Case/Air Cleaner 3-8
Brake Light Switch 3-9
Shoe 3-8
System 3-9
Cable & Harness Routing 1-9
Camshaft 6-3
Carburetor Installation 4-10
Removal 4-3
Carburetor Idle Speed 3-7
Charging System 15-4
Clutch Shoe Inspection 3-10
Clutch/Driven Pulley 8-8
Crankcase/Crankshaft 11-1
Crankcase Assembly 11-5
Crankcase Breather 3-5, 4-16
Separation 11-2
Crankshaft 11-4
Cylinder Head/Valves 6-1
Cylinder/Piston 7-1
Cylinder Compression 6-15
Head Assembly 6-14
Head Disassembly 6-9
Head Removal 6-8
Installation 7-6
Removal 7-2
Drive Pulley/Clutch/Driven Pulley 8-1
Drive Belt 8-3
Pulley 8-4
Electrical Equipment 15-1
Emission Control System 1-13
Engine Removal/Installation 5-1
Engine Installation 5-4
Oil 2-2
Oil Filter Screen Cleaning 2-3
Removal 5-2
Evaporative Emission Control System 3-7
System (California Model Only) 4-17
Final Reduction 9-1
Assembly 9-6
Disassembly 9-2
Float Chamber 4-7
Level Inspection 4-9
Frame Covers 12-1
Cover Installation 12-4
Front Brake 13-14
Turn Signal Base Removal 12-2
Wheel 13-10
Fuel System 4-1
Filter 3-4
Lines 3-4
Tank 4-12
Fuel Unit/Gauge 15-11
General Information 1-1
Safety 1-1
Handlebar 13-7
Headlight 13-3
Aim 3-10
High Altitude Adjustment 4-11
Horn 15-11
Ignition System 15-6
Timing 3-7
Instruments 13-4
Left/Right Rear Cover Removal 12-2
Lubrication 2-1
Points 2-8
Maintenance 3-1
Schedule 3-2
Model Identification 1-2
Nuts, Bolts, Fasteners 3-11
Oil Pump Assembly 2-6
Disassembly 2-4
Inspection 2-5
Removal 2-3
Piston Installation 7-6
Removal 7-3
Rear Wheel/Brake/Suspension 14-1
Rear Brake 14-3
Suspension 14-5
Wheel 14-2
Resistor 15-12
Service Information
Alternator 10-1
Crankcase/Crankshaft 11-1
Cylinder Head/Valves 6-1
Cylinder/Piston 7-1
Drive Pulley/Clutch/Driven Pulley 8-1
Electrical Equipment 15-1
Engine Removal/Installation 5-1
Final Reduction 9-1
Frame Covers 12-1
Fuel System 4-1
Lubrication 2-1
Maintenance 3-1
Rear Wheel/Brake/Suspension 14-1
Steering/Front Wheel/Brake/Suspension 13-1
Service Rules 1-1
Spark Plug 3-6
Specifications 1-3
Starter 8-14
Steering/Front Wheel/Brake/Suspension 13-1
Starting System 15-8
Head Bearings 3-11
Suspension 13-10, 3-18
Switches 15-10
Taillight/Rear Turn Signal Light 15-12
Throttle Operation 3-4
Tools 1-7
Torque Values 1-5
Transmission Oil 2-6
Troubleshooting
Crankcase/Crankshaft 11-1
Cylinder Head/Valves 6-2
Cylinder/Piston 7-1
Drive Pulley/Clutch/Driven Pulley 8-2
Electrical Equipment 15-2

Final Reduction 9-1
Frame Covers 12-2
Fuel System 4-2
Lubrication 2-1
Rear Wheel/Brake/Suspension 14-1
Steering/Front Wheel/Brake/Suspension 13-2
Trunk/Leg Shield Removal 12-3
Turn Signal Light 13-4
Vacuum Chamber 4-5
Valve Clearance 3-6
Guide Replacement 6-11
Seat Inspection and Refacing 6-11
Wheels 3-11
Wiring Diagrams 16-1